US00D492929S1

(12) United States Design Patent

Fong

(10) Patent No.: US D492,929 S
(45) Date of Patent: ** Jul. 13, 2004

(54) **BUOY INTERCONNECTION BUFFER**

(76) Inventor: **Mickey L. Fong**, 10280 Wise Rd., Auburn, CA (US) 95630

(**) Term: **14 Years**

(21) Appl. No.: **29/187,554**

(22) Filed: **Jul. 31, 2003**

(51) **LOC (7) Cl.** **12-06**
(52) **U.S. Cl.** **D12/316**; D12/107
(58) **Field of Search** D12/107, 316; 114/345, 266–267; 441/129

(56) **References Cited**

U.S. PATENT DOCUMENTS

5,020,465 A * 6/1991 Langford 114/345
5,239,940 A * 8/1993 Griffin 114/353
5,324,221 A * 6/1994 Kaufman et al. 441/129
6,053,790 A * 4/2000 Langford 441/129
6,213,832 B1 * 4/2001 Fest, Sr. 441/129

* cited by examiner

Primary Examiner—Nelson C. Holtje
(74) *Attorney, Agent, or Firm*—Heisler & Associates

(57) **CLAIM**

The ornamental design for a buoy interconnection buffer, as shown and described.

DESCRIPTION

FIG. **1** is a perspective view of a preferred embodiment of the buoy interconnection buffer according to this invention;

FIG. **2** is a front elevation view of the embodiment of FIG. **1**;

FIG. **3** is a left side view of the embodiment of FIG. **1**, the right side view being a mirror image;

FIG. **4** is a top plan view of the embodiment of FIG. **1**, the bottom plan view being a mirror image;

FIG. **5** is a detailed view of a portion of that which is shown in FIG. **4**. The unique surface shading in the upper portion of FIG. **5** is representative of edges of four layers of fabric material embedded within the primary material forming the buffer of the preferred embodiment;

FIG. **6** is a perspective view of an alternative embodiment of the buoy interconnection buffer according to this invention;

FIG. **7** is a rear elevation view of the embodiment of FIG. **6**;

FIG. **8** is a left side view of the embodiment of FIG. **6**, the right side view being a mirror image;

FIG. **9** is a top plan view of the embodiment of FIG. **6**, the bottom plan view being a mirror image;

FIG. **10** is a detailed view of a portion of that which is shown in FIG. **9**. The unique surface shading in the upper portion of FIG. **10** is representative of edges of four layers of fabric material embedded within the primary material forming the buffer of the alternative embodiment; and,

FIG. **11** is a perspective view of the invention in use connecting elongate cylindrical buoys together.

The broken lines in FIG. **11** are for purposes of illustration only and form no part of the claimed design.

1 Claim, 3 Drawing Sheets

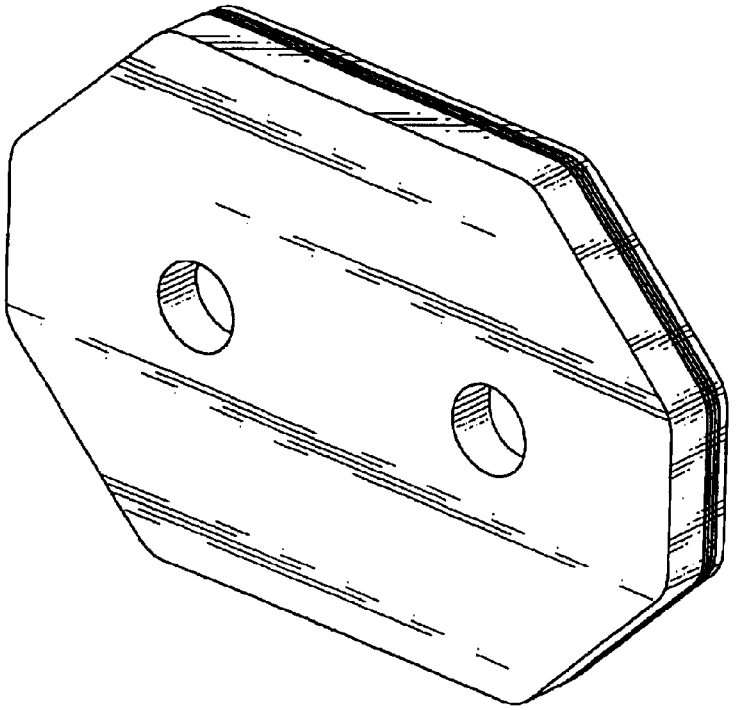

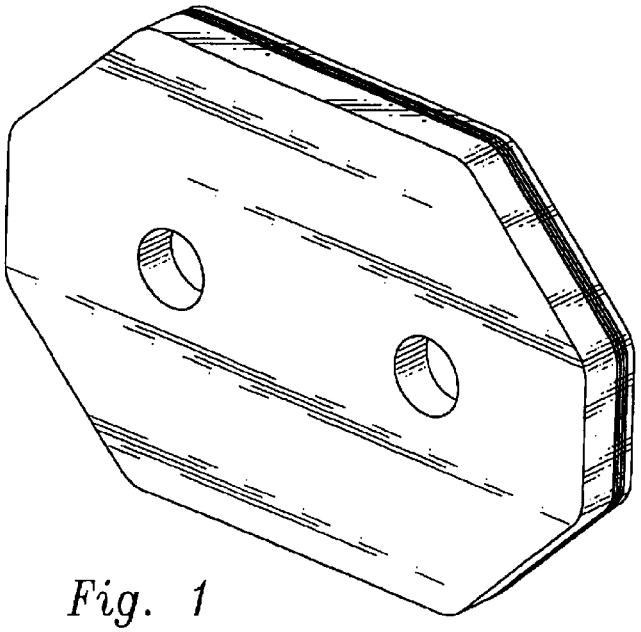

Fig. 1

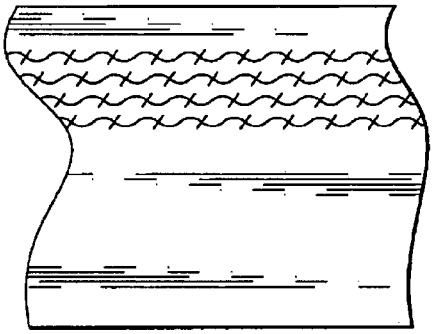

Fig. 5

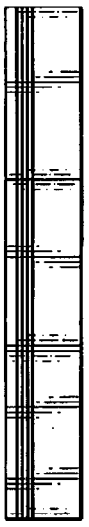

Fig. 3

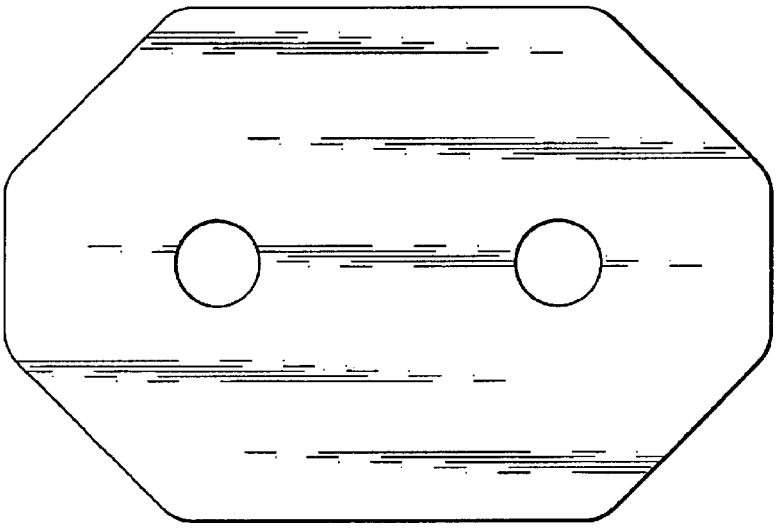

Fig. 2

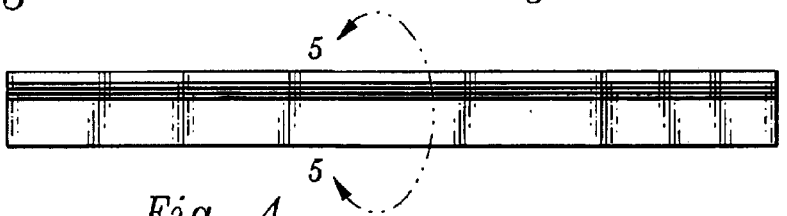

Fig. 4

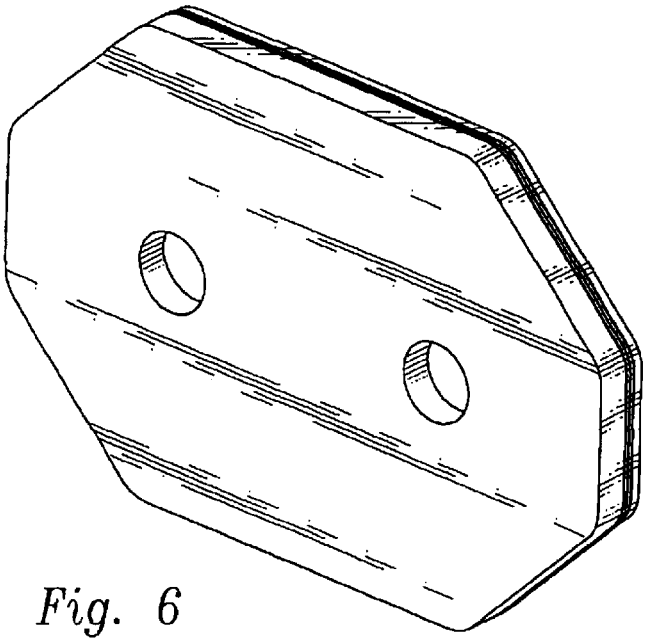

Fig. 6

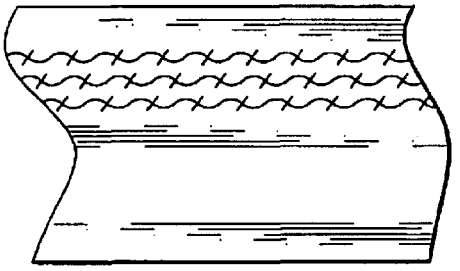

Fig. 10

Fig. 8

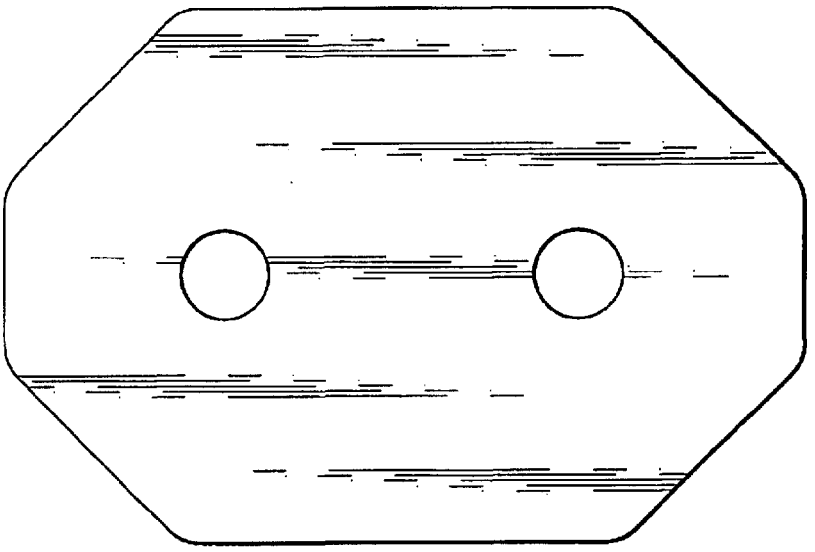

Fig. 7

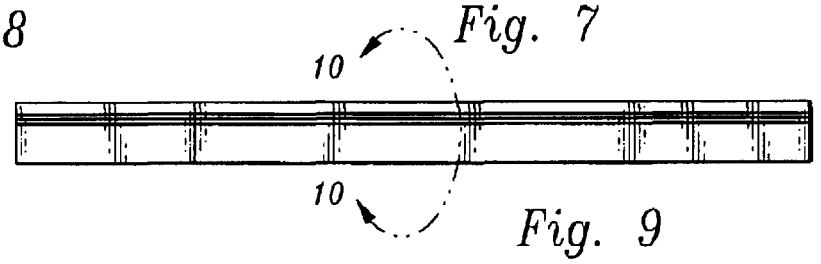

Fig. 9

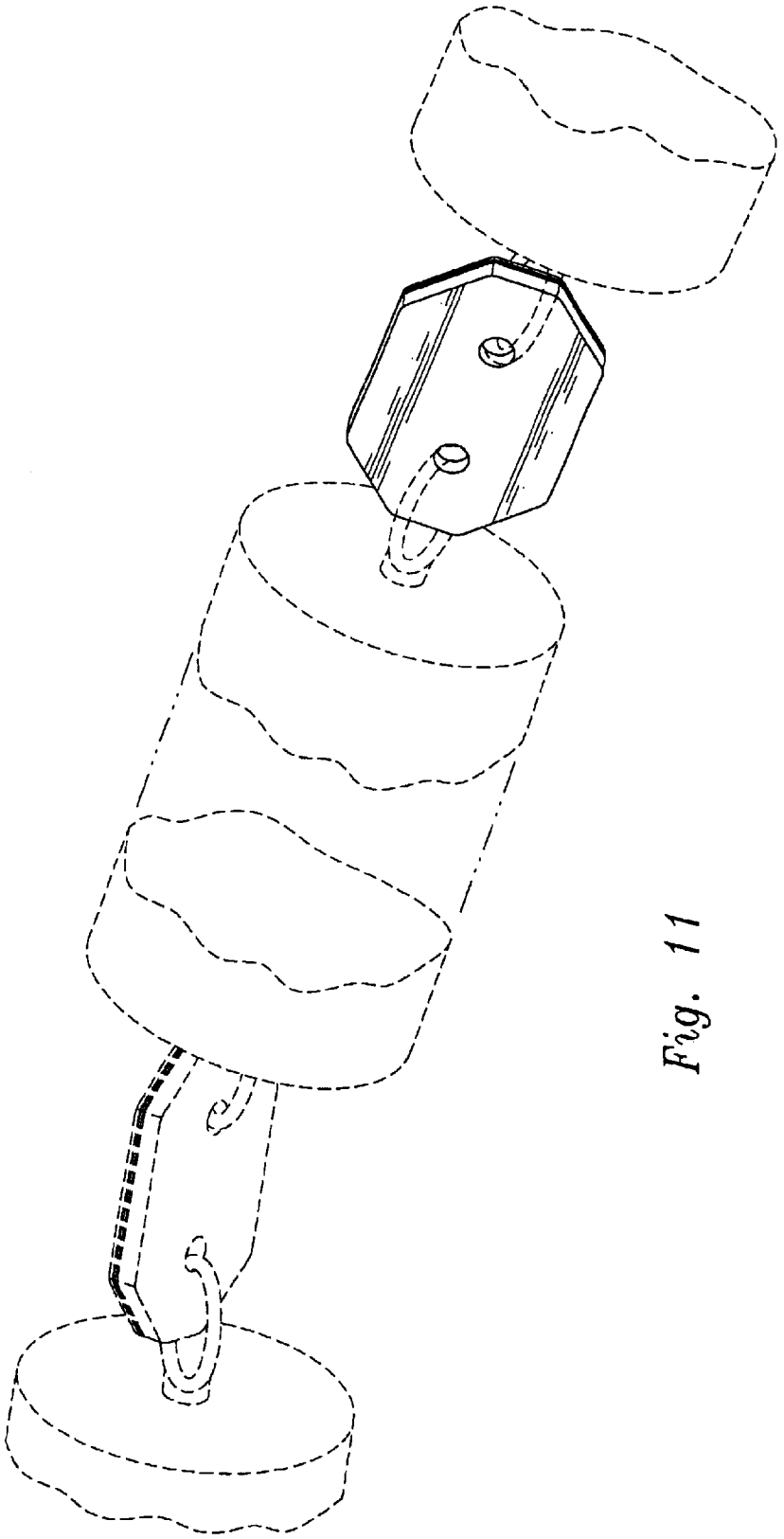

Fig. 11