US006076789A

United States Patent [19]

Jackson

[11] Patent Number: 6,076,789

[45] Date of Patent: Jun. 20, 2000

[54] **INSTRUMENT HOLSTER AND KIT**

[76] Inventor: **Barry D. Jackson**, 5708 Tahama St., Sacramento, Calif. 95841

[21] Appl. No.: **09/111,623**

[22] Filed: **Jul. 7, 1998**

[51] **Int. Cl.**[7] **A44B 13/00**

[52] **U.S. Cl.** **248/205.2**; 224/901.4; 248/682

[58] **Field of Search** ..... 248/205.2, 682, 248/693, 74.3; 224/148.6, 240, 901.4; 24/16 PB, 17 AP

[56] **References Cited**

U.S. PATENT DOCUMENTS

D. 203,101	12/1965	Holder .	
D. 280,863	10/1985	Leath .	
D. 297,683	9/1988	Beauchan .	
D. 316,999	5/1991	Sarff .	
4,572,415	2/1986	Fehr .	
4,757,927	7/1988	Rutty .	
4,759,963	7/1988	Uso, Jr. et al.	248/205.2 X
4,771,927	9/1988	Ventura .	
4,896,465	1/1990	Rhodes et al.	248/205.2 X
5,065,964	11/1991	Polak	248/205.2 X
5,174,483	12/1992	Moore, IV .	
5,443,192	8/1995	Hodges .	
5,503,316	4/1996	Stewart	224/901.4 X
5,511,704	4/1996	Linderer .	

Primary Examiner—Ramon O. Ramirez

Attorney, Agent, or Firm—Heisler & Associates

[57] **ABSTRACT**

This is a holster for suspending an instrument such as a portable telephone from the waistband belt of a user, or from another fixed object. The holster includes a flexible body member with a cinching strap projecting from one end thereof. One face of the cinching strap is covered with one patch of a mating pair of fabric fasteners. A cinching loop is affixed to the body, about a third of the way along its midlength and in transverse relation to the longitudinal axis thereof. A patch of mating fabric complementary to that on the cinching strap is disposed on the same face of the body as the cinching loop, but at the opposite end of the body from which the cinching strap projects. The opposed face of the body bears an instrument attachment loop. The cinching strap is adapted to be wrapped around a waistband belt or other fixed object, threaded through the cinching loop, and drawn tight, thus cinching the cinching strap constrictively around the waistband belt. The mating fabric on the cinching strap and on the body opposite the cinching loop are then engaged by pressing them together, thus completing affixation of the holster to the waistband belt. The projecting spring clip of an instrument can then be slidingly engaged with the instrument attachment loop. Once the holster is so engaged with the waistband belt, and the instrument is so engaged with the holster, it is unlikely that, by mistake or without authorization, the instrument will be easily separated from the holster or the holster will be separated from the waistband belt.

20 Claims, 10 Drawing Sheets

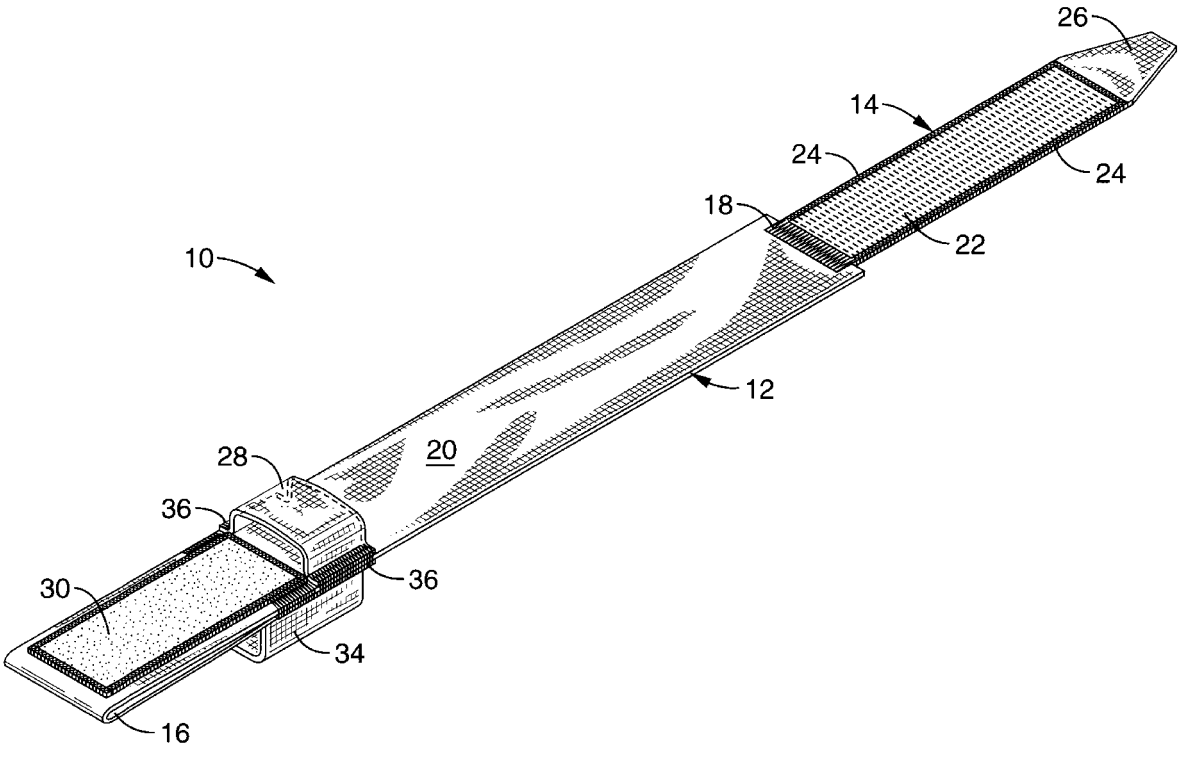

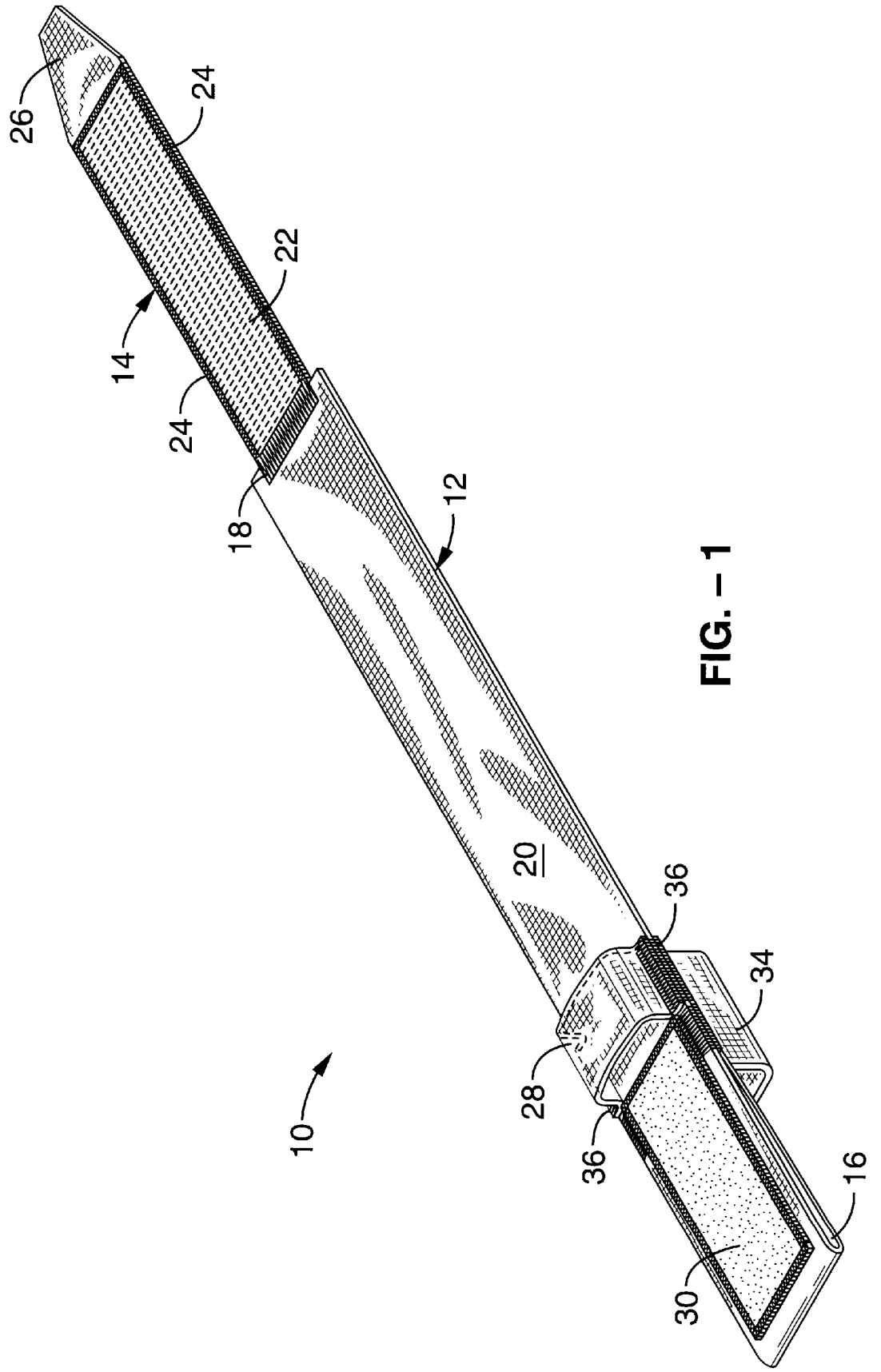

FIG. – 1

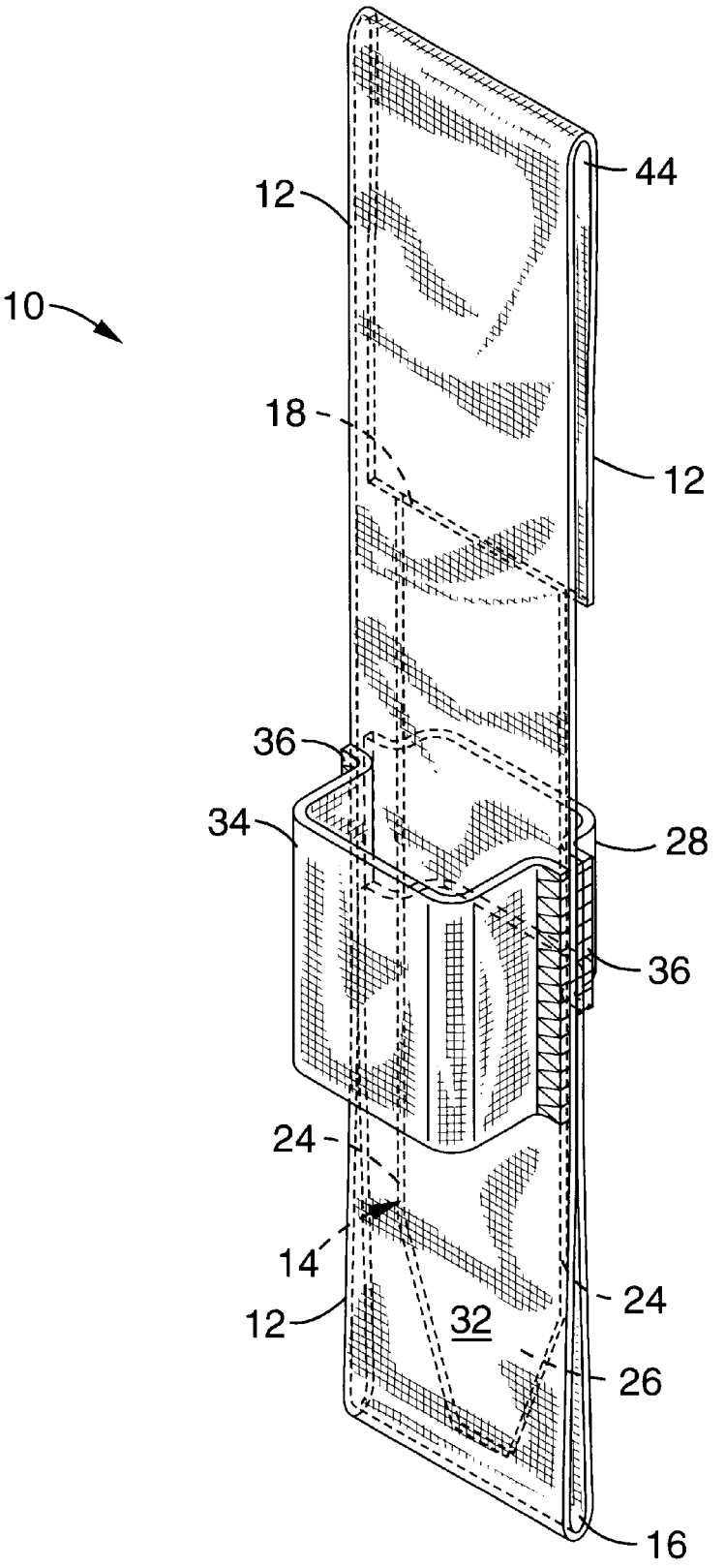

FIG. – 2

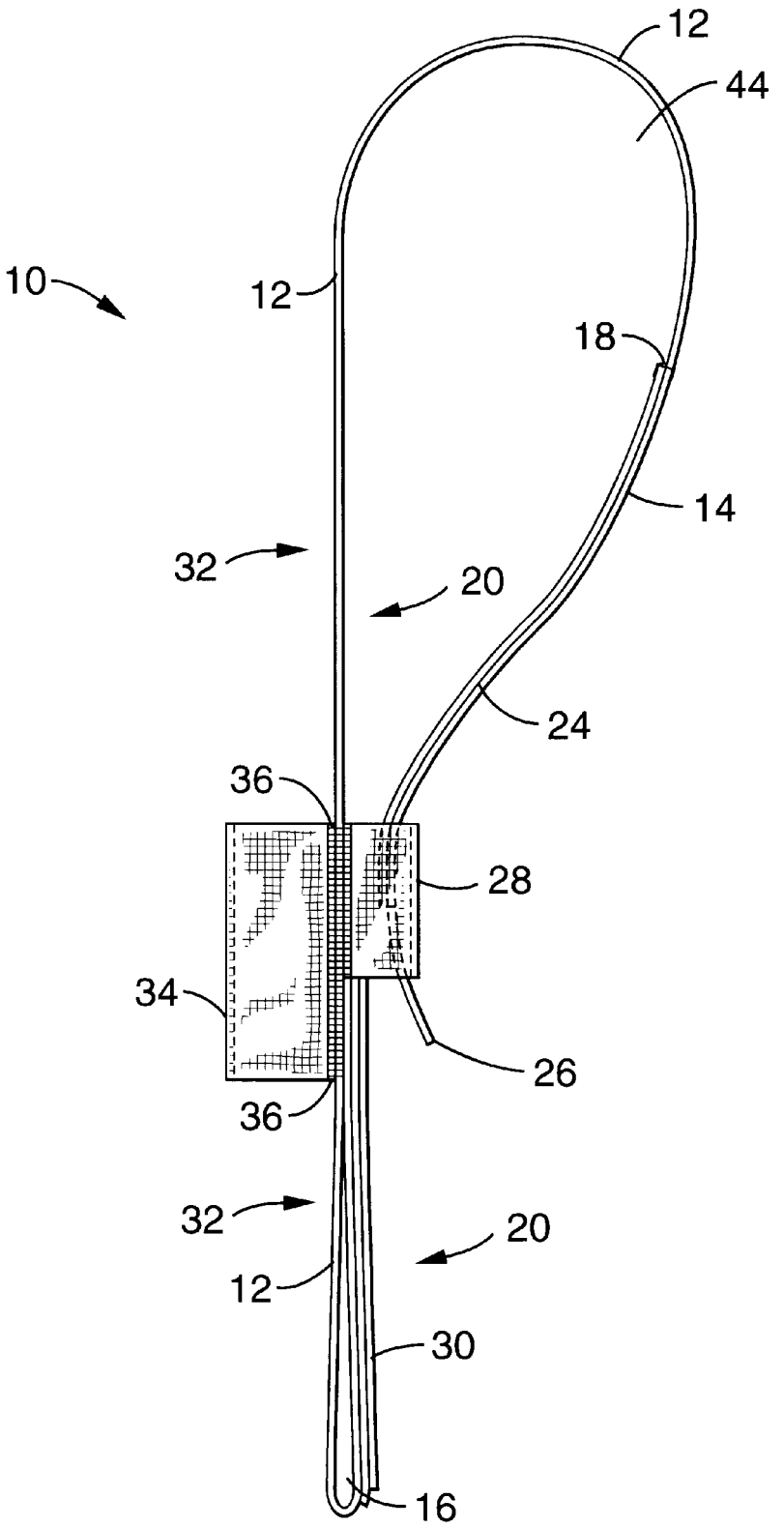

FIG. – 3

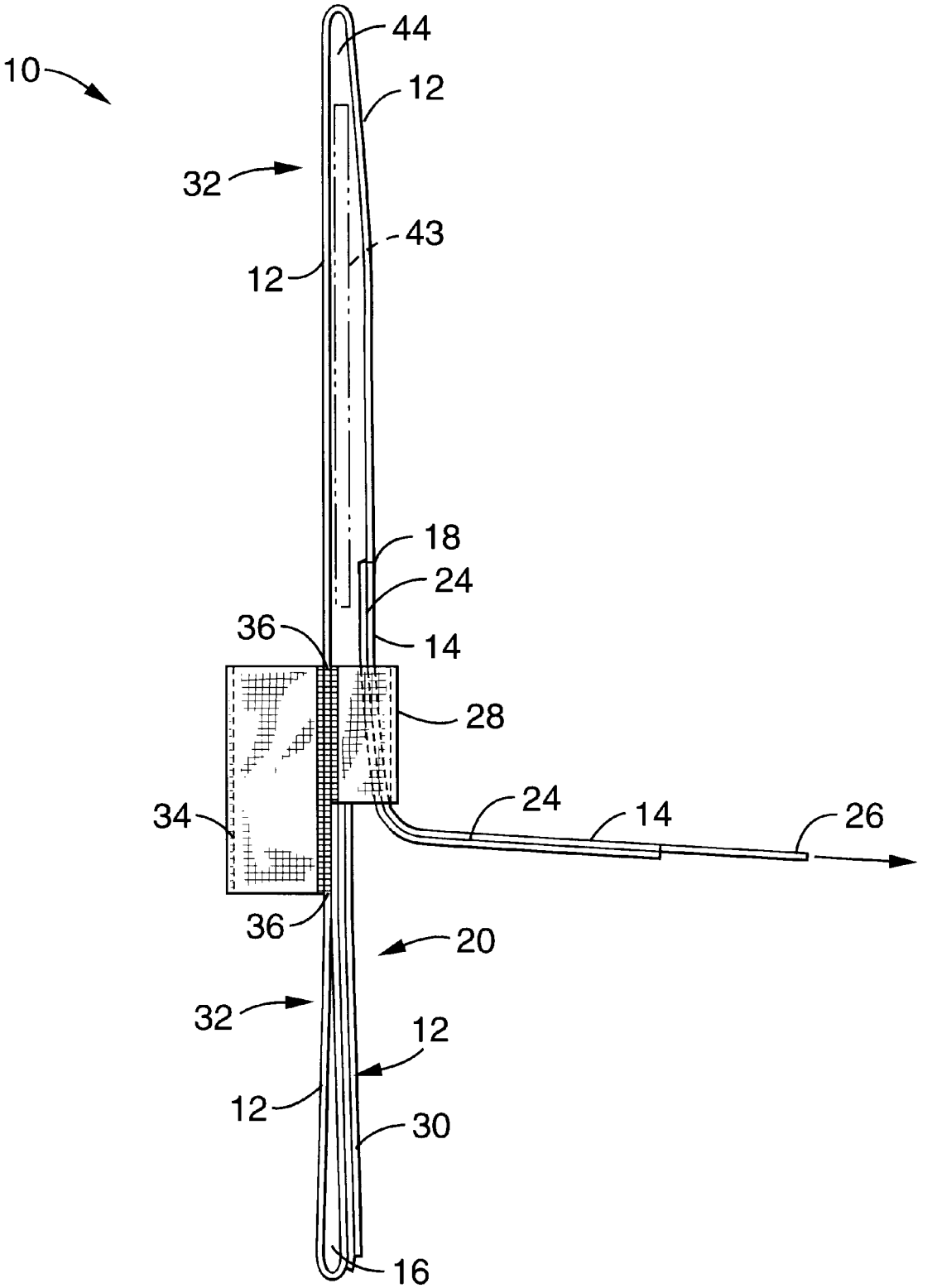

FIG. – 4

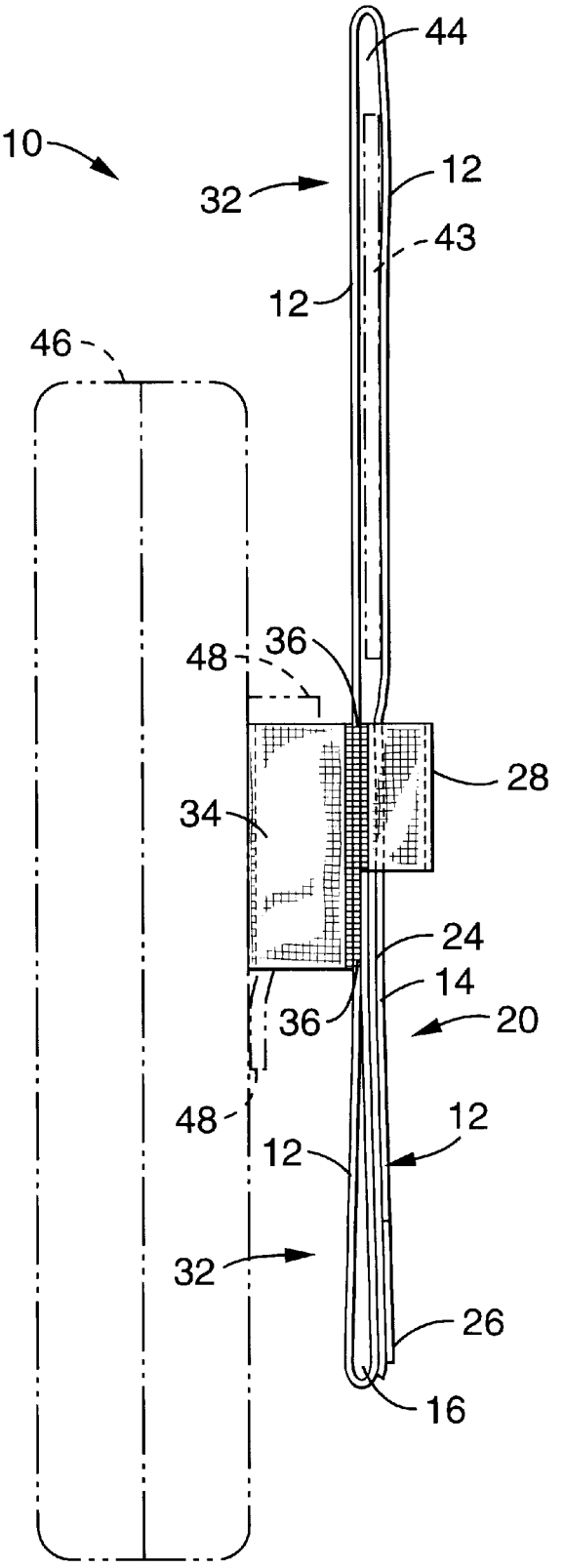

FIG. – 5

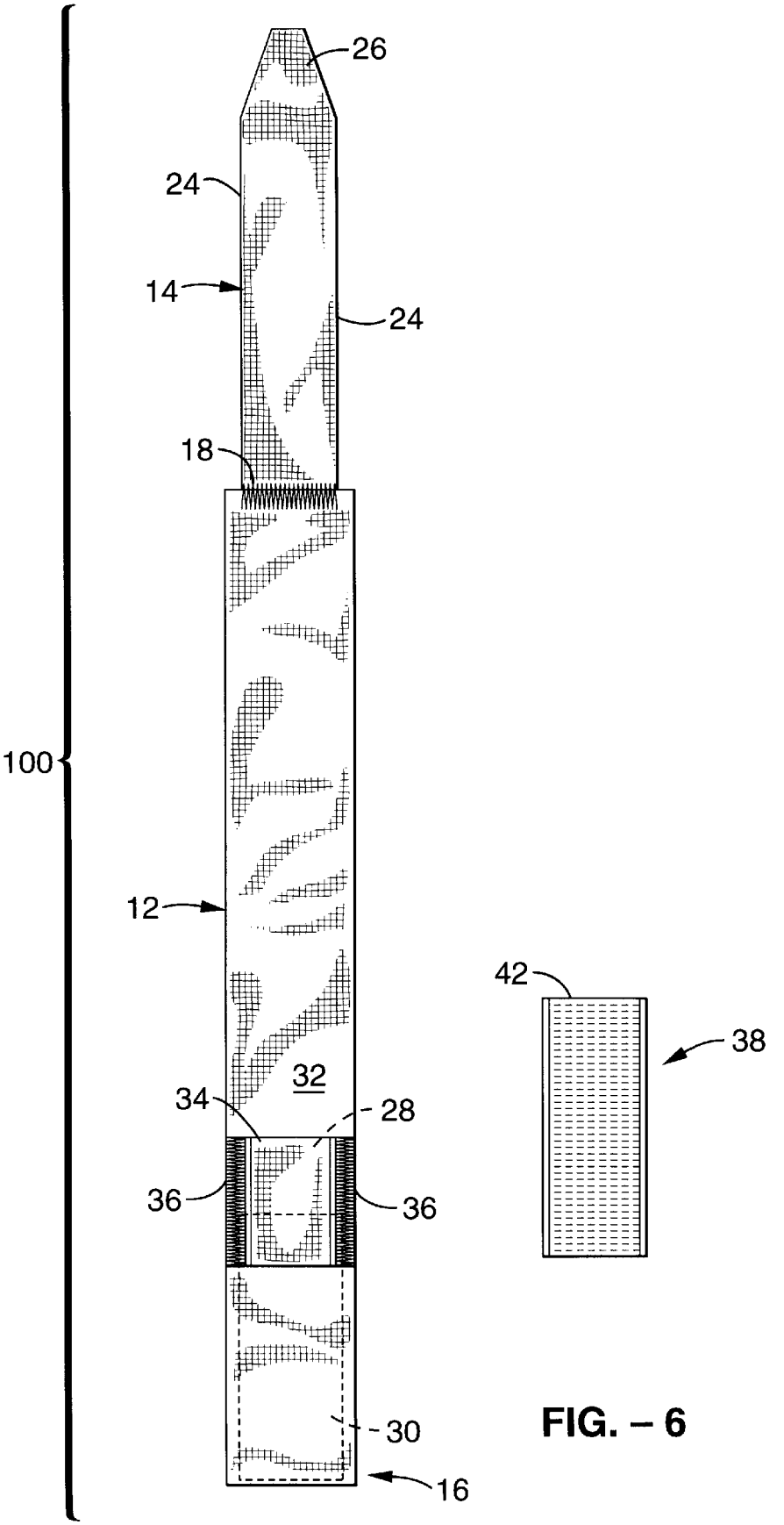

FIG. – 6

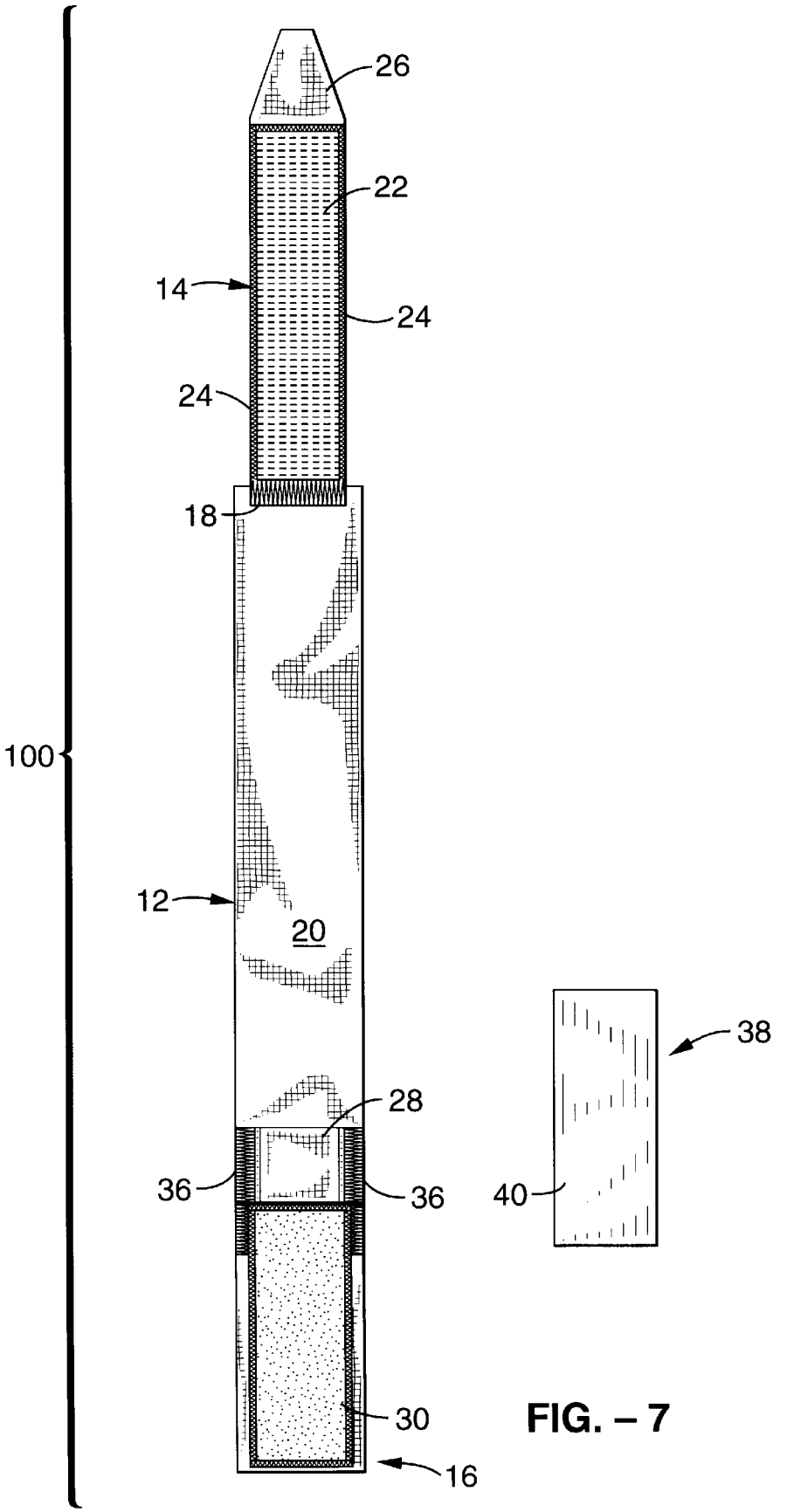

FIG. – 7

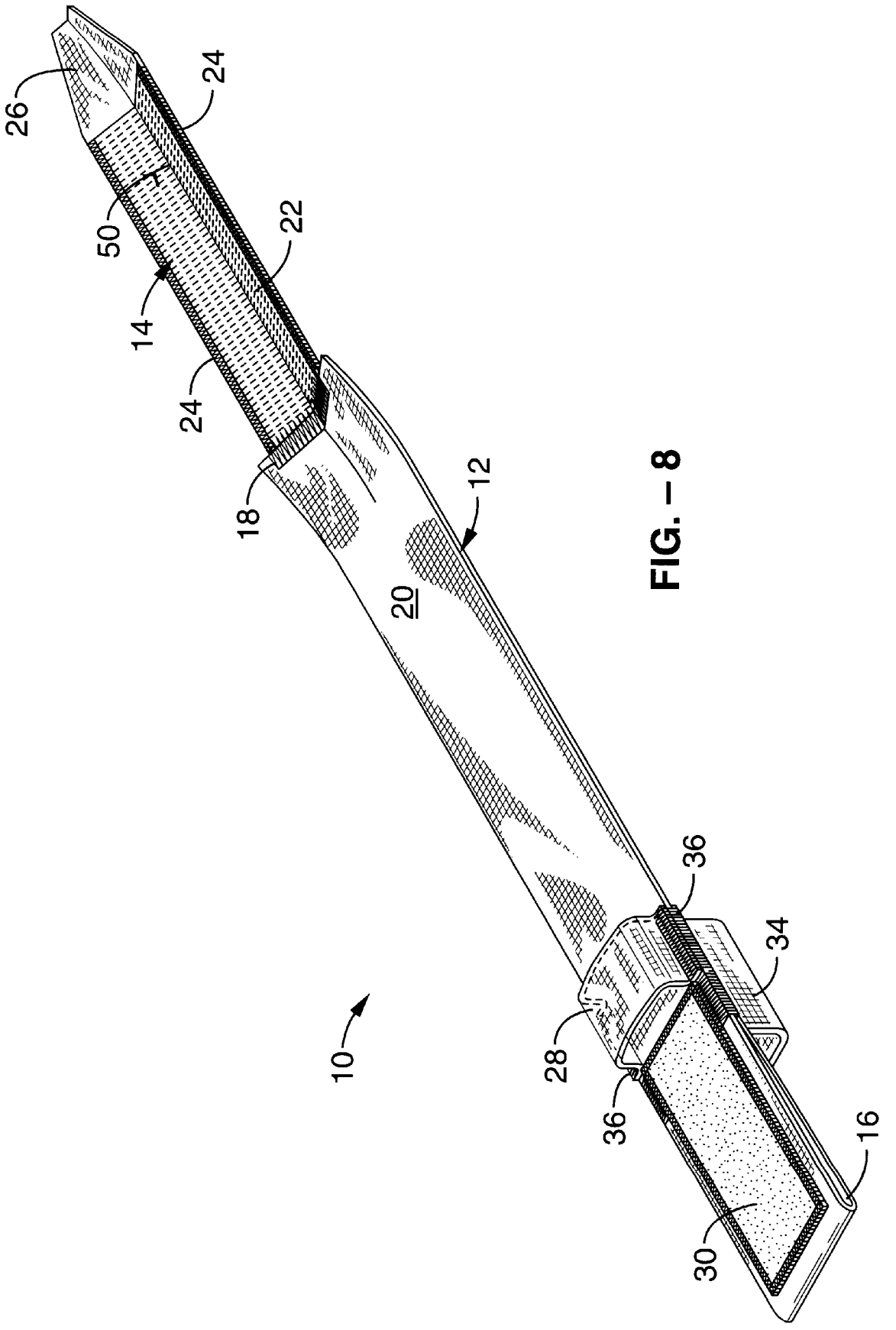

FIG. – 8

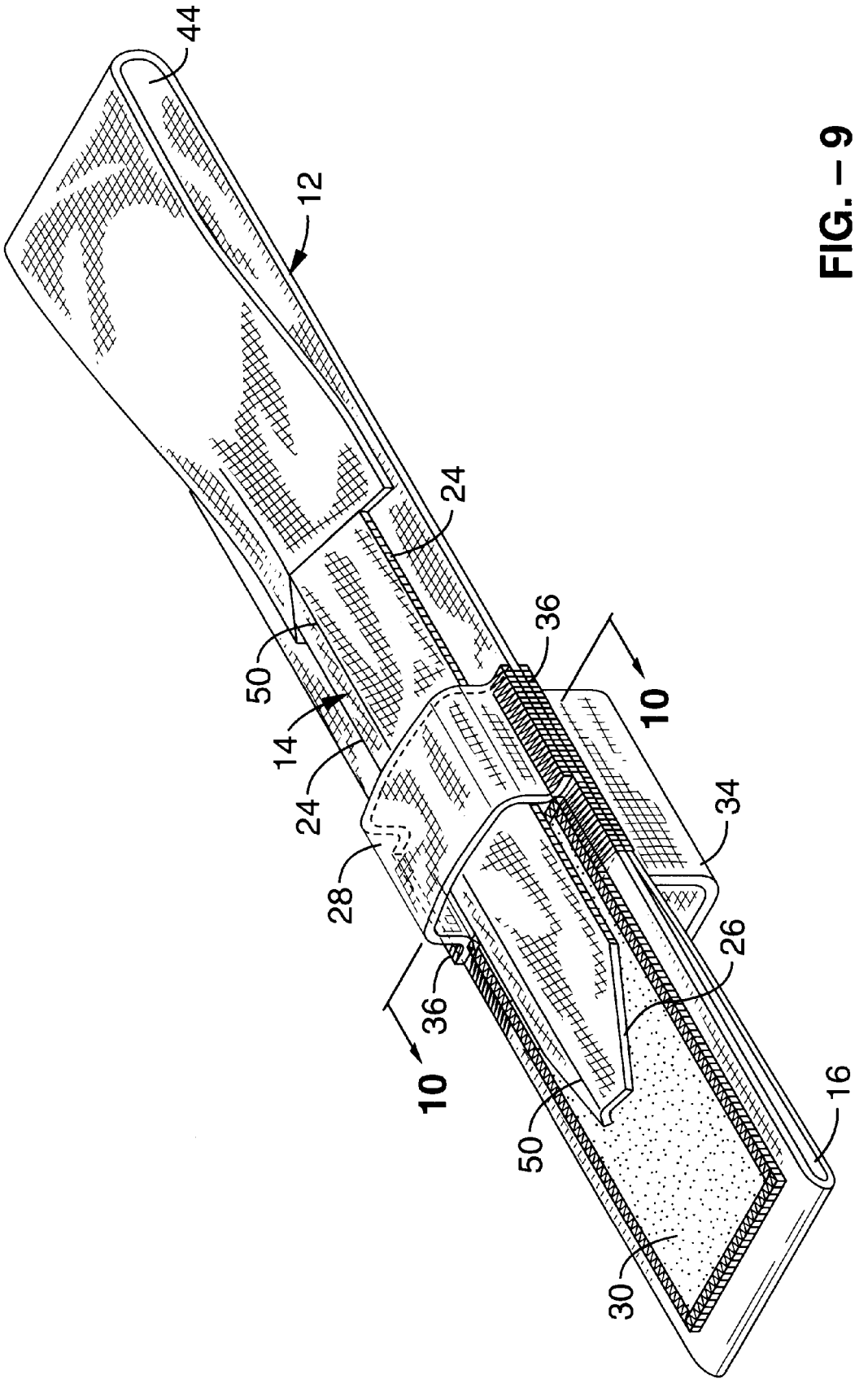

FIG. – 9

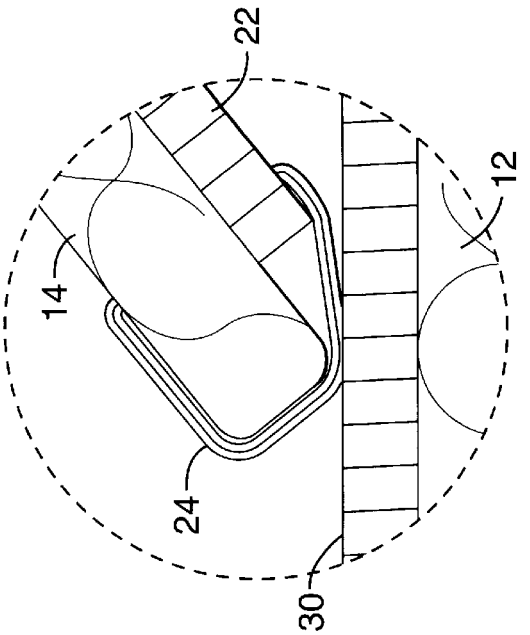

FIG. – 11

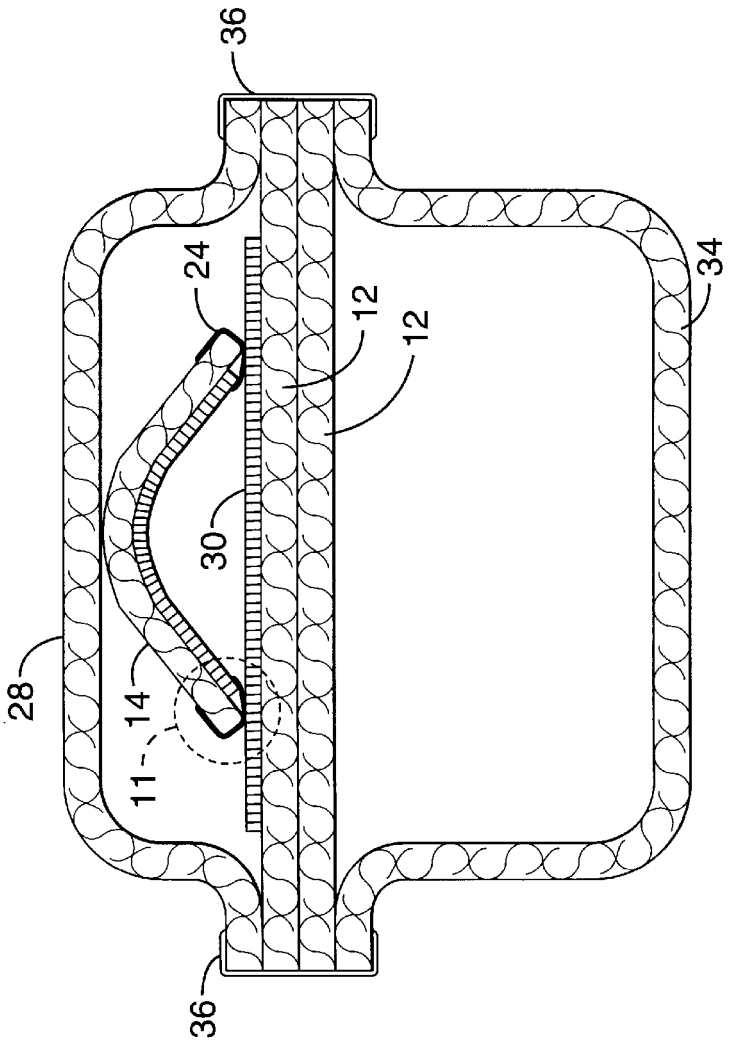

FIG. – 10

INSTRUMENT HOLSTER AND KIT

BACKGROUND OF THE INVENTION

1. Field of the Invention

The present invention relates generally to holsters for securely suspending items that need to be kept close at hand, and more specifically to holsters for suspending instruments such as portable telephones, pagers, personal stereos, walkie-talkies, calculators and the like.

2. Description of the Related Art

Portable electronic instruments such as cellular and PCS telephones, pagers, radios and the like now play important roles in the daily lives of a large percentage of the population. These and a variety of other instruments such as electronic calculators and various mechanical and electronic tools and devices need to be kept close at hand during work and recreation. However, it is often a challenge to keep such instruments within reach, while keeping them from being lost, stolen or broken.

Portable cellular telephones provide a good example. They are used throughout the day for many purposes, including business and leisure communication, and for safety. Users often carry their telephones on their persons for extended periods of time. Although some cellular telephones are quite small, most are not comfortably carried in a pocket. And, they often take up too much room in, or are difficult to retrieve from, an already cluttered purse or vehicle glove box.

For convenience, several holster constructions have been proposed which allow users to carry idle telephones hands-free. Holsters typically attach to a waistband belt, thereby positioning the telephone close to the waistline of the user. Wearing the telephone close to the waistline, however, often limits the mobility of the user and causes discomfort, especially when sitting or squatting. Additionally, exposure of the telephone at the waistline creates the chance of the telephone being dislodged from the holster.

Some holsters are attached to a waistband belt by threading the belt's end through a fixed, non-releasable loop on the holster. This is a secure arrangement, but these fixed loop-type holsters have a drawback in that they require the waistband belt to be buckled and unbuckled to detach the holster. Examples of these include the holsters shown in U.S. Pat. No. 5,443,192 issued to Hodges in 1995 and U.S. Pat. No. 5,511,704 issued to Linderer in 1996. Such fixed loop-type holsters cannot be attached to items having the types of straps, belts or handles without a buckle or other opening. Some purse straps and handles are so constructed; they have both ends fixedly attached to the purse's body, thus preventing attachment of a fixed loop-type holster. Briefcase handles, although otherwise a convenient place from which to suspend a telephone holster, normally have their ends fixed to the case. Belt guide loops on trousers, interior door handles in vehicles, and many other fixed objects from which it might be convenient to suspend a cellular telephone holster cannot be used for that purpose if the holster's attachment loop is fixed and unable to be opened.

Other holsters employ various rigid, resilient slide clips to permit attachment of the holster to a fixed object. These are normally fashioned from a piece of spring steel folded to define two separate leaves. One leaf is attached to the telephone-engaging portion of the holster, and the other leaf has its free edge bent slightly outward to permit the clip to receive the edge of a belt or other object from which the holster is to be suspended. Examples of such slide clip-type

holsters are shown in U.S. Design Pat. No. 203,101 issued to Hunter in 1965; U.S. Design Pat. No. 280,863 issued to Leath in 1985; U.S. Design Pat. No. 316,999 issued to Sarff in 1991; and, U.S. Pat. No. 4,757,927 issued to Rutty in 1988. Such slide clip-type holsters are convenient in that they can be easily clipped to, and unclipped from, a waistband belt without undoing its buckle. And, they can be engaged with objects having fixed ends, such as purse straps and belt guide loops on trousers. However, slide clip-type holsters have several drawbacks, as well. One is that they can be easily dislodged from a waistband belt, such as when the user is sitting or squatting. And, they can be easily disengaged from a purse strap during normal use. Further, the size of the slide clip, and particularly the radius of the fold between its leaves, restricts the range of objects from which the holster can be suspended. For example, a slide clip with a small radius fold may be adapted to attach most securely to a waistband belt comprised of a single layer of leather. However, that same slide clip will not permit engagement of the holster with a briefcase handle or a vehicle door handle.

Yet another type of holster employs one or more flexible straps fitted with engagement means such as snaps, or hook and loop fabric fasteners such as are sold under the trademark Velcro. The straps on holsters of this type are adapted to encircle a fixed object of any shape or thickness, such as a waistband belt, a purse strap, or a vehicle's interior door handle. Once around the fixed object, these straps can be bound securely in place; and, they can be disengaged from the fixed object just as easily. Examples of such flexible strap-type holsters are shown in U.S. Pat. No. 5,174,483 issued to Moore, IV et al. in 1992; U.S. Design Pat. No. 297,683 issued to Beauchan in 1988; and, U.S. Pat. No. 4,572,415 issued to Fehr in 1986. Such holster attachment mechanisms solve some problems of the fixed loop-type and slide clip-type holsters discussed farther above. However, they still have several drawbacks. One is that although the attachment straps of these open strap-type holsters can encircle fixed objects of different sizes and shapes, many, such as those in the Beauchan and Moore, IV et al. patents, have little adjustability in the circumferences of their straps. This causes them to hang very loosely around fixed objects of minimal girth, and makes it more likely that they will catch on passing objects. Further, the opposed strap portions of open strap-type holster fasteners can be difficult to engage with one another in certain circumstances, such as when the user is attempting to fasten the holster to a waistband belt while wearing the belt about the waist on trousers. In that case, the straps of a holster such as that in the Fehr patent, which mate with one another on the opposite or inner side of the waistband belt, would be difficult to draw tight around the belt. Common experience makes it easily understood that it would be difficult to insert one's fingers between a waistband belt and the waistband of a pair of trousers to fasten overlapping hook and loop fabric-faced straps to one another, while the waistband belt remains buckled around one's waist in normal use.

Further, those holsters, such as in the Fehr, Beauchan and Moore, IV, et al patents, which employ hook and loop fabric fasteners for engagement of straps to fixed objects are somewhat difficult to use, because they do not permit easy fine adjustment of the attachment straps' tightness. Once the mating fabric patches touch one another, they start to bind. After the initial touching, it is difficult to slide the fabric patches laterally with respect to one another to adjust the straps' tightness. Another drawback is that attachment straps of this type are difficult to cinch tight around an object. First,

there is nothing to pull against to get good purchase to achieve a cinching action; and, second, once cinched, there is no easy means provided for temporarily binding the straps in place while the hook and loop fasteners are being engaged.

In addition to the above-noted drawbacks of the forgoing holsters, once removed from a waistband belt, purse handle, or the like, no provision is made to keep the holster in a handy location for ease of later reattachment.

Yet further, holsters in current use such as those above frequently employ unreliable mechanisms for engaging the instrument. Most simply wrap around the instrument, thus permitting it to be fairly easily inadvertently disloged. Such wrap-around holsters make the instruments easy targets for thieves, as well. Yet holsters which employ covers and other closures for better security can also make it difficult to remove the instrument for use, and to replace it afterward. And, if such a cover or closure is inadvertently left unfastened, the unsecured instrument can be easily lost or stolen. A further problem with all holsters of the wrap-around and cover or closure-types is that they usually obscure or obstruct some functional portion of the instrument. This is inconvenient, because such holsters require the removal of the instrument from the holster for use.

Thus, it appears that a need exists for an instrument holster which is able to be easily and securely attached to a variety of fixed objects of different shapes and sizes. And, it would be of particular advantage if such holster were as easy to attach to a belt, strap or handle not having a releasable buckle or fastener, as to a belt, strap or handle having a buckle or fastener. Further, it would be beneficial if such holster's attachment means were able to be easily cinched tight to a fixed object. Yet further, it would be advantageous if such holster were to have a fixed object attachment mechanism, preferably employing hook and loop fabric fasteners, which allowed for unimpeded fine adjustment of the position of the mating portions of the mechanism with respect to one another before engagement with the fixed object.

Other benefits would result if the instrument attachment portion of the holster were able to retain the instrument securely against loss or theft, while not obscuring or obstructing its functional portions and permitting easy removal by the rightful user. And, once removed from a fixed object such as a waistband belt or purse strap, some means for keeping the holster in a handy location for later reattachment, and for permitting easy use of the instrument in the interim, would be beneficial.

SUMMARY OF THE INVENTION

The instrument holster and kit of the present invention are adapted to overcome the above-noted shortcomings and to fulfill the stated needs. The holster comprises a body; a cinching loop which projects from the body and divides the body into first and second portions; a cinching strap projecting from the first portion of the body; means for releasably binding the cinching strap to the second portion of said body; and, means for securing an instrument to the body.

The kit of the invention further includes means for selectively affixing said cinching strap securely to, and for releasing said strap from, a generally planar surface.

It is an object of the present invention to provide an instrument holster which is able to be securely attached around belts and other fixed objects of various shapes and sizes.

Another object of this invention is to provide an instrument holster which is able to be attached to a fixed object not having a releasable fastener in its length.

Yet another object of this invention is to provide an instrument holster which is able to be attached to a waistband belt without the necessity of releasing the waistband belt's fastener.

It is a further object of the present invention to provide an instrument holster which is able to be cinched tight to a fixed object.

Yet a further object of the present invention is to provide a precisely-adjustable mechanism for attaching an instrument holster to a fixed object.

Still a further object of the present invention is to provide an instrument holster which is able to retain an instrument securely without obstructing its function.

Another object of the present invention is to provide an instrument holster wherein the user is able to detach the instrument with ease, yet protection is provided against inadvertent or unauthorized detachment.

A further object of the invention is to provide an instrument holster attachment mechanism able to be cinched around a fixed object, and also able to be suspended from a generally planar surface.

And it is also an object of the present invention to provide a superior mechanism for cinching a strap around a fixed object.

Still further objects of the inventive instrument holder and kit disclosed herein will be apparent from the drawings and following detailed description thereof.

BRIEF DESCRIPTION OF THE DRAWINGS

FIG. **1** is a perspective view of the holster of the invention in its fully extended posture.

FIG. **2** is a perspective view of the holster of the present invention, with the holster configured as when cinched to an object.

FIG. **3** is a side elevation view of the holster of the invention, showing the cinching strap end being inserted through the cinching loop.

FIG. **4** is a side elevation view of the holster of the invention, showing the cinching strap end pulled through the cinching loop and drawn perpendicularly away from the holster's body, as when cinching the holster to an object.

FIG. **5** is a side elevation of the inventive holster configured as in FIG. **2**, with the cinching strap bound to the holster's body, showing a cellular telephone in phantom line engaged with the attachment loop on the instrument bearing face of the holster.

FIG. **6** is a plan view of one side of the kit of the invention, showing the instrument bearing face of the holster.

FIG. **7** is a plan view of the kit of the invention opposite to the side depicted in FIG. **6**, showing the cinching face of the holster.

FIG. **8** is a perspective view of the holster showing longitudinal creasing of the cinching strap end in preparation for practicing an alternative method of inserting the cinching strap through the cinching loop.

FIG. **9** is a perspective view of the holster showing the longitudinally-creased cinching strap end passing through the cinching loop.

FIG. **10** is a cross-sectional view taken on lines **10—10** of FIG. **9**.

FIG. **11** is an enlarged detail of a portion of the cross-sectional view of FIG. **10**, taken from the dashed circle in FIG. **10** identified "**11**," showing the side seams of the cinching strap.

DESCRIPTION OF THE PREFERRED EMBODIMENT

Referring now specifically to the drawings, FIGS. **1** and **2** show the inventive instrument holster, which is generally identified herein with the reference numeral **10**. Holster **10**'s primary body member **12** is an elongate, generally rectangular, flexible strip of nylon webbing. One end of primary body member **12** has a thinner, more flexible, slightly narrower strip of nylon webbing projecting axially therefrom, this being identified herein as cinching strap **14**. The other end of primary body member **12** is folded back and sewed to itself to form finger loop **16**. Approximately one-third, or so, of primary body member **12**'s overall length is doubled in the formation of finger loop **16**.

Cinching strap **14** is bound to the end edge of primary body member **12** with a transverse row of conventional stitches **18**. One face of cinching strap **14**, i.e. the "cinching face" **20** shown in FIG. **1**, bears a patch of hook pile-type mating fabric **22** which substantially covers the entirety of cinching strap **14**. Mating fabric of the type sold under the trademark VELCRO has been found to work satisfactorily.

Zigzag-stitched parallel side seams **24** bind hook pile patch **22** to cinching strap **14**. Side seams **24** are preferably comprised of very closely-spaced stitches built up to a thickness greater than that of the combined thickness of the webbing material of cinching strap **14** and hook pile-type mating fabric patch **22**. Further, the thread used in cinching strap side seams **24** is preferably a synthetic composition having a slippery surface texture, i.e. a low coefficient of friction. Monofilament thread has been found to work best for the intended purpose, which is described fully below. Conventional stitches of any type known in the art to be satisfactory may be used to bind the end edges (unnumbered) of hook pile patch **22** in place.

The terminal end of cinching strap **14** is beveled and is not covered with any type of mating fabric, thus forming terminal tab **26**.

Cinching loop **28** is comprised of a flexible piece of nylon webbing sewed to opposed side edges of primary body member **12**. Cinching loop **28** is disposed at approximately the same point on primary body member **12** where the double-layered finger loop **16** portion diverges from the single-layered portion. That is, about one-third of primary body member **12**'s length lies to the finger loop **16** side, and two-thirds lies to the side of primary body member **12** to which cinching strap **14** is attached.

Cinching loop **28** should be cut from a strip of webbing stock somewhat narrower than the width of either primary body member **12** or cinching strap **14**. Further, the longitudinal axis of the fabric of cinching loop **28**, as established from the elongate strip of nylon webbing stock from which it was originally cut, should be oriented so that the fabric of cinching loop **28** is transverse to the longitudinal orientation of the fabric of primary body member **12**. The transverse length of cinching loop **28**, before being sewed in place, is approximately 1.5 times the width of the webbing strip used for primary body member **12**. As shown in the drawing figures, cinching loop **28** preferably stands up generally rectangularly from the surface of cinching face **20** of primary body member **12**. Thus, a clear, unimpeded passage is provided beneath cinching loop **28**. Cinching loop **34** should be of sufficient dimensions to permit passage therethrough of cinching strap **14**.

Cinching face **20** also includes a patch of loop pile-type mating fabric **30** which substantially covers the entirety of the doubled finger loop **16** portion of primary body member **12**. Conventional stitches of any type known in the art to be satisfactory may be used to bind the side and end edges (unnumbered) of loop pile patch **30** in place. Looped fabric complementary to and suitable for binding securely to hook pile patch **22** is required. Fabric of the type sold under the trademark VELCRO has been found to work satisfactorily.

The opposed "instrument bearing face" **32** of holster **10** includes transversely-oriented, instrument attachment loop **34**. Instrument attachment loop **34** is preferably somewhat longer in axial length than cinching loop **28**, although like loop **28** the piece of stock used in its construction is approximately 1.5 times the width of primary body member **12**. Cinching loop **28** preferably stands up generally rectangularly from the surface of cinching face **20** of primary body member **12**. Thus, a clear, unimpeded passage is provided beneath instrument attachment loop **34**. Instrument attachment loop **34** should be of sufficient dimensions to permit passage therethrough of a slidingly-engageable spring clip of the type commonly found to project from portable telephones and other such instruments.

That face of finger loop **16** which is part of instrument bearing face **32** does not include any mating fabric; only that face of finger loop **16** which is part of cinching face **20** includes mating fabric, namely loop pile patch **30**.

Loop attachment seams **36** along the sides of primary body member **12** adjacent cinching loop **28** and instrument attachment **34** bind these loops securely to primary body member **12**. Loop attachment seams **36** are equal in axial length, that axial length being at least the axial length of the longer of the two loops, instrument attachment loop **34**. Loop attachment seams **36** also serve to bind the free end of the strip of webbing of primary body member **12** back upon itself to form finger loop **16**. An additional transverse seam (not shown) to bind that free end to primary body member **12** may also be used, if desired.

The kit of the invention, identified by reference numeral **100** herein and depicted in FIGS. **6** and **7**, includes the aforedescribed holster, and also includes an auxiliary adhesive-backed patch of loop pile-type mating fabric **38**. Auxiliary mating fabric patch **38** should be adapted for mounting on a generally planar surface. The adhesive back **40** of auxiliary mating fabric patch **38** may be of the peel-off, pressure-applied type, or it may be of a type which must be either wetted or treated with a catalyst before application to a surface. It should also be understood that the fabric of auxiliary mating fabric patch **38** may be of the loop pile-type **42** as shown, or of the alternative complementary hook pile type, if necessary to carry out one or more below-described uses of holster **10**.

In use, cinching strap **14** is first wrapped around an object, such as a waistband belt **43**, or other fixed object. The object can be of nearly any cross-sectional shape. Terminal tab **26** of cinching strap **14** is then threaded through cinching loop **28** as shown in FIG. **3**. This forms object engaging loop **44**, through which the waistband belt or other fixed object passes. Next, as shown in FIG. **4**, terminal tab **26** of cinching strap **14** is drawn in a generally perpendicular direction, away from the plane of primary body member **12**. As cinching strap **14** is drawn in the direction described, cinching strap **14** constricts tightly around the fixed object, conforming to its cross-sectional shape. Snug engagement of cinching strap **14** about the object is best achieved if cinching strap **14** is drawn away from the plane of primary body member **12** with more than minimal force. In attaching holster **10** to one's own waistband belt **43**, for example, the best purchase of cinching strap **14** about belt **43** may be

gained by inverting holster **10** and drawing terminal tab **26** in a direction perpendicular to the generally vertical plane surface of one's body.

Once pulled snug about the object, cinching strap **14** is held tightly cinched and prevented from back-slipping by pressing the thumb against the flat, outer surface of cinching loop **28** in a direction perpendicular to, and toward the plane of, primary body member **12**. The described force of the thumb is best met with equal, opposing force of the forefinger against the flat, outer surface of instrument attachment loop **34**. Of course, this collapses cinching loop **28** and instrument attachment loop **34** in opposite, opposed directions, toward the plane of primary body member **12**. The afore-described dimensions and transverse orientation of the webbing fabric of cinching loop **28** permit it to collapse most symmetrically and with an even surface-to-surface contact against cinching strap **14**. And, the orientation of the grain of the fabric of cinching loop **28** perpendicular to the grain of the fabric of cinching strap **14** increases the friction between the two with a given amount of finger pressure, thus making it easier to hold cinching strap **14** tightly cinched while the following step is being carried out.

Once cinching strap **14** is held in its snug position as described, the opposed thumb and forefinger of the other hand may be pinched toward one another on opposed sides of holster **10** and run toward the finger loop **16** end of holster **10**. This action brings the entire length of cinching strap **14** into contact with, and causes it to lie flat against, the cinching face **20** side of finger loop **16**. This also causes hook pile-type fabric patch **22** to become engaged with mating, complementary loop pile-type fabric patch **30**. This result is shown in FIG. **5**.

Holster **10** may also be cinched loosely to a fixed object, but doing so may not yield all of the advantages able to be derived from holster **10**'s unique structure. In any case, once engaged with a fixed object, holster **10** normally depends vertically therefrom.

Once cinched to a fixed object such as waistband belt **43**, a portable telephone **46** or other such instrument may be engaged with holster **10** by sliding the free end of its spring clip **48** through the passage defined between instrument attachment loop **34** and holster **10**'s instrument bearing face **32**. Common experience makes it clear that lifting upward on telephone **46** will not dislodge it from holster **10** as would occur if telephone **46** were simply clipped directly to a waistband belt, because primary body member **12** is flexible and will simply move along with telephone **46**. Nevertheless, telephone **46** is easy to remove, intentionally, from holster **10** with the user's two hands by simply pulling downward on finger loop **16** and simultaneously pulling upward on telephone **46** to disengage its spring clip **48** from instrument attachment loop **34**.

Intentional removal of holster **10** from waistband belt **43** or another such object is most easily accomplished by, first, removing any instrument engaged therewith from instrument attachment loop **34**. Next, cinching strap **14** is pulled away from, and disengaged with, loop pile patch **30**, thus returning to a position generally as is depicted in FIG. **4**. Then, with one's thumb covering that portion of loop pile patch **30** closest to cinching loop **28**, cinching strap **14** may be freely withdrawn from cinching loop **28** without interfering, unintended engagement of hook pile fabric patch **22** and loop pile fabric patch **30**.

The unique combination, placement and interaction of cinching strap **14**, cinching loop **28** and loop pile patch **30** also make it difficult for mistaken or unauthorized removal of holster **10** from waistband belt **43**. This is because, even if mating fabric patches **22** and **30** are disengaged from one another, cinching strap **14** is not easily withdrawn from cinching loop **28** without covering loop pile patch **30** with the thumb. Any attempt to withdraw cinching strap **14** without covering loop pile patch **30** will allow the hooked pile of patch **22** to become engaged with that portion of loop pile patch **30** closest to cinching loop **28**, preventing cinching strap **14** from being completely withdrawn. It should be noted that to maximize this security function, the passage between cinching loop **28** and the face of primary body member **12** should be as small as possible, without interfering with the action of inserting cinching strap **14** through cinching loop **28** during the process of engaging holster **10** with a fixed object.

One improved method of use of holster **10** permitted by the structure disclosed herein follows. In carrying out the procedure depicted in FIGS. **3** and **4**, and as set forth in the text which refers thereto, it is possible for interfering, unintended engagement of hook pile fabric patch **22** and loop pile fabric patch **30** to occur. This can be avoided by creasing cinching strap **14** longitudinally, as shown in FIG. **8**, before inserting it through cinching loop **28**. Providing cinching strap **14** with hook pile-type mating fabric patch **22** rather than the alternative loop pile fabric permits a very well-defined crease **50** to form in cinching strap **14**, and causes cinching strap **14** to become more rigid, as well. This is thought to be the result of the linearly-arranged rows of hooks in hook patch **22** which cause any fold made therebetween to be as straight as the arrangement of the hooks. Further, the hooks most closely adjacent to crease **50** seem to engage one another loosely, yet tangibly, thus tending to keep crease **50** in place. Yet further, the angled cross-section and double-layer construction of cinching strap **14**, as best seen in FIGS. **10** and **11**, tends to impart linear and lateral rigidity to cinching strap **14**, thus making it easier to drive cinching strap **14** through the passage defined between cinching loop **28** and the face of primary body member **12**. This operation is shown in FIGS. **9** and **10**.

FIGS. **10** and **11** show that, when creased and driven through cinching loop **28**, cinching strap **14** tends to glide axially on its low-friction, zig-zag stitched side seams **24**. As depicted in FIG. **11**, this permits the hooks and loops of hook pile patch **22** and loop pile patch **30**, respectively, to remain remote from each other while the position of cinching strap **14** is being linearly adjusted. Once adjusted, mere finger pressure on the outer face of cinching strap **14** will cause hook pile patch **22** and loop pile patch **30** to engage securely with one another.

Kit **100**, depicted in FIGS. **6** and **7**, is used by, first, pressing the adhesive back **40** of auxiliary mating fabric patch **38** to a wall, dashboard, or other generally planar surface, thus adhering auxiliary patch **38** thereto. Then, when holster **10** is not in use cinched to waistband belt **43** or some other fixed object around which cinching strap **14** is able to be attached, holster **10** may be "parked" simply by engaging hook pile patch **22** of cinching loop **14** thereto. Thus, holster **10** then depends from auxiliary patch **38** ready to be disengaged therefrom for use as above described. Alternatively, holster **10** may be used to suspend cellular telephone **46** or another such instrument from instrument attachment loop **34**. Such instrument is just as secure against mistaken disengagement from holster **10** by being lifted upward as when holster **10** is engaged with waistband belt **43** or some other fixed object which cinching strap **14** can surround. Yet, the instrument is just as easy to remove from

holster **10**, as well, simply by pulling downward on finger loop **16** and, simultaneously, pulling upward on the instrument.

The foregoing detailed disclosure of the inventive instrument holder **10** and kit **100** is considered as only illustrative of the preferred embodiment of, and not a limitation upon the scope of, the invention. Those skilled in the art will envision many other possible variations of the structure disclosed herein that nevertheless fall within the scope of the following claims. For example, the body of holster **10** could be of a single layer throughout; and, although it is preferred that holster **10**'s body be flexible, it could be rigid without departing from the spirit of the invention, and without avoiding the claims.

It is also contemplated that both the cinching loop and the instrument attachment loop could be disposed on the same face of a holster to meet various needs, and that to do so would not avoid the claims.

It is further contemplated that the cinching loop and/or instrument attachment loop could be constructed of rigid or semirigid materials. Even rigid rings may work satisfactorily for some purposes. Yet further, the inventive holster may be constructed with methods and materials which make the cinching and instrument attachment loops integral with the body of the holster. One-piece, molded constructions are also envisioned.

And, alternative uses for this inventive holster and kit may later be realized. Accordingly, the scope of the invention should be determined with reference to the appended claims, and not by the examples which have herein been given.

What is claimed is:

1. A holster for securing an instrument to an object, wherein the holster comprises:

a. a body;

b. a cinching loop projecting from said body and dividing said body into first and second portions;

c. a cinching strap projecting from said first portion of said body;

d. means for releasably binding said cinching strap to said second portion of said body;

e. means for securing an instrument to said body; and

f. wherein an end portion of said cinching strap includes means for permitting said end portion to be folded lengthwise and, when so folded, to be moved slidingly to and fro through said cinching loop.

2. The holster of claim **1**, wherein said end portion of said cinching strap further includes means for permitting said end portion, after being folded lengthwise and slidingly moved through said cinching loop to a final desired position, to be flattened and in being so flattened to cause said cinching strap binding means to bind said cinching strap to said body.

3. The holster of claims **1**, wherein said cinching strap binding means comprises a pair of mating, selectively engageable and releasable members engageable upon contact with one another, one member of said selectively engageable and releasable member pair being disposed upon said cinching strap and the other member of said pair being disposed upon said body.

4. The holster of claim **3**, wherein said body-disposed member of said pair is positioned and dimensioned such that, when said cinching strap is through said cinching loop and when said members of said pair are disengaged, a user is able to cover said body-disposed member with a thumb, thereby preventing contact between said mating members, and thereby permitting withdrawal of said strap from said loop without said mating members becoming engaged with one another.

5. The holster of claim **1**, wherein said cinching strap has thickened, low-friction, parallel side edges.

6. The holster of claim **5**, wherein said cinching strap's thickened, low-friction side edges are comprised of high-density stitching with low-friction thread.

7. A holster for securing an instrument to an object, wherein the holster comprises:

a. a body;

b. a cinching loop projecting from said body and dividing said body into first and second portions;

c. a cinching strap projecting from said first portion of said body;

d. means for releasably binding said cinching strap to said second portion of said body;

e. means for securing an instrument to said body; and

f. wherein said body has a first face and a second face, said means for securing an instrument being disposed upon said first face of said body and said cinching loop being disposed upon said second face of said body.

8. A holster for securing an instrument to an object, wherein the holster comprises:

a. a body;

b. a cinching loop projecting from said body and dividing said body into first and second portions;

c. a cinching strap projecting from said first portion of said body;

d. means for releasably binding said cinching strap to said second portion of said body;

e. means for securing an instrument to said body; and

f. wherein said means for securing an instrument comprises an attachment loop.

9. The holster of claim **8**, wherein said attachment loop is comprised of flexible fabric.

10. The holster of claim **8**, wherein said attachment loop is generally horizontal when said holster is affixed to and depends freely from an object.

11. The holster of claim **8**, wherein said body has a first face and a second face, and wherein said attachment loop is disposed upon said first face of said body and said cinching loop is disposed upon said second face of said body.

12. The holster of claim **8**, wherein said attachment loop projects from a mid-portion of said body, between said first and second body portions.

13. A holster for securing an instrument to an object, wherein the holster comprises:

a. a body having first and second ends;

b. a flexible cinching strap projecting from said first end of said body;

c. a cinching loop projecting from a mid-portion of said body, said cinching loop being dimensioned to permit said cinching strap to be threaded therethrough;

d. means for releasably binding said cinching strap to said body adjacent said second end of said body; and,

e. means for securing an instrument to said body.

14. A holster for securing an instrument to an object, wherein the holster comprises:

a. a body;

b. a cinching loop projecting from said body and dividing said body into first and second portions;

c. a cinching strap projecting from said first portion of said body;

d. means for releasably binding said cinching strap to said second portion of said body;

e. means for securing an instrument to said body; and

f. wherein said means for securing an instrument comprises an attachment loop oriented transverse to the length of said body.

15. The holster of claim **14**, wherein said body has a first face and a second face, and wherein said attachment loop is disposed upon said first face of said body and said cinching loop is disposed upon said second face of said body.

16. The holster of claim **14**, wherein said attachment loop projects from a mid-portion of said body.

17. A kit for securing an instrument, selectively, to a first type of object or to a second type of object, the first type of object having a generally linear, graspable member, the second type of object having a generally planar surface, the kit comprising:

a. a holster including means for engaging an instrument;

b. a strap projecting from said holster;

c. means for permitting said strap, once wrapped around a generally linear, graspable member, to be cinched tight around said generally linear, graspable member;

d. means for selectively affixing said strap securely to, and for releasing said strap from, said holster;

e. means for selectively affixing said strap securely to, and for releasing said strap from, a generally planar surface.

18. The holster of claim **17**, wherein mating fabric of a first type is disposed on said strap, and wherein complementary mating fabric of a second type is disposed on said holster.

19. The holster of claim **18**, further comprising:

i. a separate patch of said second type of mating fabric; and,

ii. means for securely affixing said patch of said second type of mating fabric to a generally planar surface.

20. The holster of claim **17**, wherein said holster comprises an elongate body with a transverse cinching loop dimensioned to permit an end of said strap to be threaded therethrough.

* * * * *