US006523349B2

(12) **United States Patent**
**Viteri**

(10) **Patent No.: US 6,523,349 B2**
(45) **Date of Patent: Feb. 25, 2003**

(54) **CLEAN AIR ENGINES FOR TRANSPORTATION AND OTHER POWER APPLICATIONS**

(75) Inventor: **Fermin Viteri**, Sacramento, CA (US)

(73) Assignee: **Clean Energy Systems, Inc.**, Sacramento, CA (US)

( * ) Notice: Subject to any disclaimer, the term of this patent is extended or adjusted under 35 U.S.C. 154(b) by 0 days.

(21) Appl. No.: **09/885,377**

(22) Filed: **Jun. 19, 2001**

(65) **Prior Publication Data**

US 2002/0002827 A1 Jan. 10, 2002

**Related U.S. Application Data**

(63) Continuation of application No. 09/533,611, filed on Mar. 22, 2000, now Pat. No. 6,247,316.

(51) **Int. Cl.**[7] ..... **F01B 21/04**

(52) **U.S. Cl.** ..... **60/716**; 60/626; 60/39.6; 60/683

(58) **Field of Search** ..... 60/39.6, 716, 626, 60/683, 672

(56) **References Cited**

U.S. PATENT DOCUMENTS

| | | | |
|---|---|---|---|
| 864,017 | A | 8/1907 | Miller |
| 886,274 | A | 4/1908 | Tate |
| 1,013,907 | A | 1/1912 | Taylor |
| 1,227,275 | A | 5/1917 | Kraus |
| 1,372,121 | A | 3/1921 | Davis |
| 1,820,755 | A | 8/1931 | McMullen |

(List continued on next page.)

FOREIGN PATENT DOCUMENTS

| | | |
|---|---|---|
| DE | 1301821 | 8/1969 |
| DE | 2933932 | 12/1982 |
| DE | 3512947 | 10/1986 |
| EP | 86104859.3 | 4/1986 |
| EP | 92120907.8 | 12/1992 |
| EP | 94305077.3 | 1/1995 |
| FR | 350612 | 1/1905 |
| GB | 6394 | of 1898 |
| GB | 140516 | 3/1920 |
| GB | 271706 | 5/1927 |
| GB | 2111602 | 7/1983 |
| WO | WO/91/02886 | 3/1991 |
| WO | WO 94/10427 | 5/1994 |

OTHER PUBLICATIONS

Brauser, S. et al.; A Proposed Hydrogen–Oxygen Power Cycle; 1967; Stillwater, Oklahoma.

Reese, R. et al.; A Proposed Hydrogen–Oxygen Fueled Steam Cycle for the Propulsion of Deep Submersibles; 1971; Massachusetts.

(List continued on next page.)

*Primary Examiner*—Hoang Nguyen
(74) *Attorney, Agent, or Firm*—Heisler & Associates

(57) **ABSTRACT**

A low or no pollution engine is provided for delivering power for vehicles or other power applications. The engine has an air inlet which collects air from a surrounding environment. At least a portion of the nitrogen in the air is removed using a technique such as liquefaction, pressure swing adsorption or membrane based air separation. The remaining air is primarily oxygen, which is then compressed and routed to a gas generator. The gas generator has an igniter and inputs for the high pressure oxygen and a high pressure hydrogen containing fuel, such as hydrogen or methane. The fuel and oxygen are combusted within the gas generator, forming water and carbon dioxide with carbon containing fuels. Water is also delivered into the gas generator to control a temperature of the combustion products. The combustion products are then expanded through a power generating device, such as a turbine or piston expander to deliver output power for operation of a vehicle or other power uses. The combustion products, steam and, with carbon containing fuels, carbon dioxide, are then passed through a condenser where the steam is condensed and the carbon dioxide is collected or discharged. A portion of the water is discharged into the surrounding environment and the remainder is routed back to the gas generator.

**37 Claims, 15 Drawing Sheets**

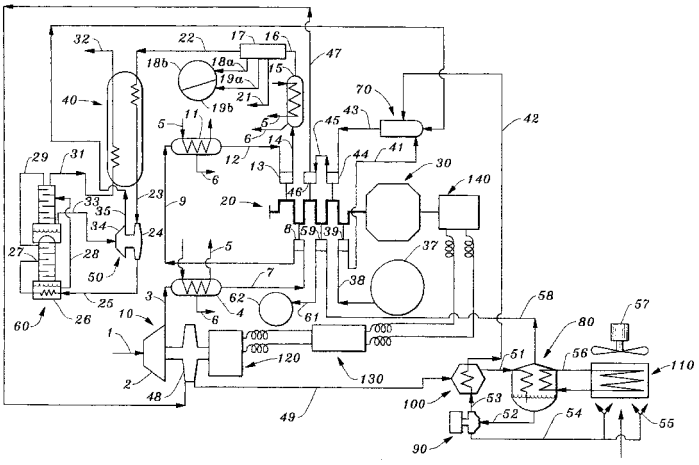

U.S. PATENT DOCUMENTS

| | | | |
|---|---|---|---|
| 1,828,784 | A | 10/1931 | Perrin |
| 2,004,317 | A | 6/1935 | Forster |
| 2,033,010 | A | 3/1936 | Russell |
| 2,078,956 | A | 5/1937 | Lysholm |
| 2,168,313 | A | 8/1939 | Bichowsky |
| 2,218,281 | A | 10/1940 | Ridder |
| 2,359,108 | A | 9/1944 | Hoskins |
| 2,368,827 | A | 2/1945 | Hanson |
| 2,374,710 | A | 5/1945 | Smith |
| 2,417,835 | A | 3/1947 | Moore |
| 2,428,136 | A | 9/1947 | Barr |
| 2,469,238 | A | 5/1949 | Newton |
| 2,476,031 | A | 7/1949 | Farkas |
| 2,478,682 | A | 8/1949 | Blackwood |
| 2,487,435 | A | 11/1949 | Goddard |
| 2,523,656 | A | 9/1950 | Goddard |
| 2,547,093 | A | 4/1951 | Ray |
| 2,563,028 | A | 8/1951 | Goddard |
| 2,568,787 | A | 9/1951 | Bosch |
| 2,582,938 | A | 1/1952 | Eastman |
| 2,605,610 | A | 8/1952 | Hermitte |
| 2,636,345 | A | 4/1953 | Zoller |
| 2,654,217 | A | 10/1953 | Rettaliata |
| 2,656,677 | A | 10/1953 | Peterson |
| 2,662,373 | A | 12/1953 | Sherry |
| 2,678,531 | A | 5/1954 | Miller |
| 2,678,532 | A | 5/1954 | Miller |
| 2,697,482 | A | 12/1954 | Blizard |
| 2,717,491 | A | 9/1955 | Barr |
| 2,722,100 | A | 11/1955 | Goddard |
| 2,763,987 | A | 9/1956 | Kretschmer |
| 2,770,097 | A | 11/1956 | Walker |
| 2,832,194 | A | 4/1958 | Kuhner |
| 2,869,324 | A | 1/1959 | Foote |
| 2,884,912 | A | 5/1959 | Lewis |
| 2,916,877 | A | 12/1959 | Walter |
| 3,038,308 | A | 6/1962 | Fuller |
| 3,054,257 | A | 9/1962 | Schelp |
| 3,101,592 | A | 8/1963 | Robertson |
| 3,134,228 | A | 5/1964 | Wolansky |
| 3,183,864 | A | 5/1965 | Stengel |
| 3,238,719 | A | 3/1966 | Harslem |
| 3,298,176 | A | 1/1967 | Forsyth |
| 3,302,596 | A | 2/1967 | Zinn |
| 3,315,467 | A | 4/1967 | DeWitt |
| 3,331,671 | A | 7/1967 | Goodwin |
| 3,335,565 | A | 8/1967 | Aguet |
| 3,359,723 | A | 12/1967 | Bohensky |
| 3,385,381 | A | 5/1968 | Calaman |
| 3,423,028 | A | 1/1969 | Stupakis |
| 3,459,953 | A | 8/1969 | Hughes |
| 3,559,402 | A | 2/1971 | Stone |
| 3,574,507 | A | 4/1971 | Kydd |
| 3,608,529 | A | 9/1971 | Smith |
| 3,649,469 | A | 3/1972 | MacBeth |
| 3,657,879 | A | 4/1972 | Ewbank |
| 3,677,239 | A | 7/1972 | Elkins |
| 3,693,347 | A | 9/1972 | Kydd |
| 3,702,110 | A | 11/1972 | Hoffman |
| 3,731,485 | A | 5/1973 | Rudolph |
| 3,736,745 | A | 6/1973 | Karig |
| 3,738,792 | A | 6/1973 | Feng |
| 3,747,336 | A | 7/1973 | Dibelius |
| 3,751,906 | A | 8/1973 | Leas |
| 3,772,881 | A | 11/1973 | Lange |
| 3,779,212 | A | 12/1973 | Wagner |
| 3,792,690 | A | 2/1974 | Cooper |
| 3,804,579 | A | 4/1974 | Wilhelm |
| 3,807,373 | A | 4/1974 | Chen |
| 3,826,080 | A | 7/1974 | DeCorso |
| 3,831,373 | A | 8/1974 | Flynt |
| 3,850,569 | A | 11/1974 | Alquist |
| 3,854,283 | A | 12/1974 | Stirling |
| 3,862,624 | A | 1/1975 | Underwood |
| 3,862,819 | A | 1/1975 | Wentworth |
| 3,928,961 | A | 12/1975 | Pfefferle |
| 3,972,180 | A | 8/1976 | Van Gelder |
| 3,978,661 | A | 9/1976 | Cheng |
| 3,980,064 | A | 9/1976 | Ariga |
| 3,982,878 | A | 9/1976 | Yamane |
| 4,063,414 | A | 12/1977 | Sata |
| 4,118,925 | A | 10/1978 | Sperry |
| 4,148,185 | A | 4/1979 | Somers |
| 4,193,259 | A | 3/1980 | Muenger |
| 4,194,890 | A | 3/1980 | McCombs |
| 4,199,327 | A | 4/1980 | Hempill |
| 4,224,299 | A | 9/1980 | Barber |
| 4,224,991 | A | 9/1980 | Sowa |
| 4,249,371 | A | 2/1981 | Romeyke |
| 4,271,664 | A | 6/1981 | Earnest |
| 4,273,743 | A | 6/1981 | Barber |
| 4,297,841 | A | 11/1981 | Cheng |
| 4,313,300 | A | 2/1982 | Wilkes |
| 4,337,618 | A | 7/1982 | Hughes |
| 4,377,067 | A | 3/1983 | Sternfeld |
| 4,425,755 | A | 1/1984 | Hughes |
| 4,434,613 | A | 3/1984 | Stahl |
| 4,456,069 | A | 6/1984 | Vigneri |
| 4,465,023 | A | 8/1984 | Wagner |
| 4,498,289 | A | 2/1985 | Osgerby |
| 4,499,721 | A | 2/1985 | Cheng |
| 4,509,324 | A | 4/1985 | Urbach |
| 4,519,769 | A | 5/1985 | Tanaka |
| 4,528,811 | A | 7/1985 | Stahl |
| 4,533,314 | A | 8/1985 | Herberling |
| 4,549,397 | A | 10/1985 | Cheng |
| 4,622,007 | A | 11/1986 | Gitman |
| 4,631,914 | A | 12/1986 | Hines |
| 4,657,009 | A | 4/1987 | Zen |
| 4,674,463 | A | 6/1987 | Duckworth |
| 4,680,927 | A | 7/1987 | Cheng |
| 4,716,737 | A | 1/1988 | Mandrin |
| 4,731,989 | A | 3/1988 | Furuya |
| 4,765,143 | A | 8/1988 | Crawford |
| 4,825,650 | A | 5/1989 | Hosford |
| 4,841,721 | A | 6/1989 | Patton |
| 4,845,940 | A | 7/1989 | Beer |
| 4,884,529 | A | 12/1989 | Byrnes |
| 4,899,537 | A | 2/1990 | Cheng |
| 4,910,008 | A | 3/1990 | Prudhon |
| 4,916,904 | A | 4/1990 | Ramsaier |
| 4,928,478 | A | 5/1990 | Maslak |
| 4,942,734 | A | 7/1990 | Markbreiter |
| 4,948,055 | A | 8/1990 | Belcher |
| 4,982,568 | A | 1/1991 | Kalina |
| 4,987,735 | A | 1/1991 | DeLong |
| 5,050,375 | A | 9/1991 | Dickinson |
| 5,055,030 | A | 10/1991 | Schirmer |
| 5,069,031 | A | 12/1991 | Shekleton |
| 5,088,450 | A | 2/1992 | Sternfeld |
| 5,103,630 | A | 4/1992 | Correa |
| 5,131,225 | A | 7/1992 | Roettger |
| 5,175,994 | A | 1/1993 | Fox |
| 5,175,995 | A | 1/1993 | Pak |
| 5,247,791 | A | 9/1993 | Pak |
| 5,265,410 | A | 11/1993 | Hisatome |
| 5,285,628 | A | 2/1994 | Korenberg |
| 5,329,758 | A | 7/1994 | Urbach |
| 5,353,589 | A | 10/1994 | Althaus |
| 5,363,642 | A | 11/1994 | Frutschi |
| 5,417,053 | A | 5/1995 | Uji |

5,680,764 A * 10/1997 Viteri ..... 60/716
6,247,316 B1 * 6/2001 Viteri ..... 60/716

OTHER PUBLICATIONS

Lotker, M,; Hydrogen for the Electric Utilities—Long Range Possibilities; 1974; Hartford, Connecticut.
Lucci, A. et al.; Title Unknown (IECEC '75 Record); 1975; Canoga Park, California.
De Biasi, V.; A Look Into real Payoffs for Combined Cycle Conversions; Gas Turbine World; 1984; pp. 17, 18, 20, 22.
Pak, P. S. et al.; Closed Dual Fluid Gas Turbine Power Plant Without Emission of CO2 into the Atmosphere; IFAC/IFORS/IAEE Symposium; 1989; Pergamon Press; Tokyo Japan.
Bolland, O. et al.; New Concepts for Natural Gas Fired Power Plants which Simplify the Recovery of Carbon Dioxide; Energy Convers. Mgmt.; 1992; pp. 467–475; vol. 33, No. 5–8; Pergamon Press Ltd.; Great Britain.
Hendriks, C.A. et al.; Carbon Dioxide Recovery Using a Dual Gas Turbine IGCC Plant; Energy Convers. Mgmt.; 1992; pp. 387–396; vol. 33, No. 5–8; Pergamon Press Ltd.; Great Britain.
Mercea, P. V. et al.; Oxygen Separation from Air by a Combined Pressure Swing Adsorption and Continuous Membrane Column Process; Journal of Membrane Science; 1994; pp. 131–144; Cincinnati; Ohio.
Bolland, O. et al.; Comparative Evaluation of Combined Cycles and Gas Turbine Systems with Water Injection, Steam Injection, and Recuperation; Transactions of the ASME; Jan. 1995; pp. 138–140, 142–145; vol. 117.
The NOx Report; Feb. 20, 1995; vol. 1, No. 1.
Alkam, M. K. et al.; Methanol and Hydrogen Oxidation Kinetics in Water at Supercritical States; 1995; The University of Iowa, Iowa City, Iowa.
Rice, I. G.; Steam–Injected Gas Turbine Analysis: Steam Rates; Journal of Engineering for Gas Turbines and Power; Apr. 1995; pp. 347–353; vol. 117.
Reinkenhof, J. et al.; Steam Generation with Modified H2/O2—Rocket Engines; unknown date.
Sternfeld, H.; A Hydrogen/oxygen Steam Generator for the Peak–Load Management of Steam Power Plants; unknown date.

* cited by examiner

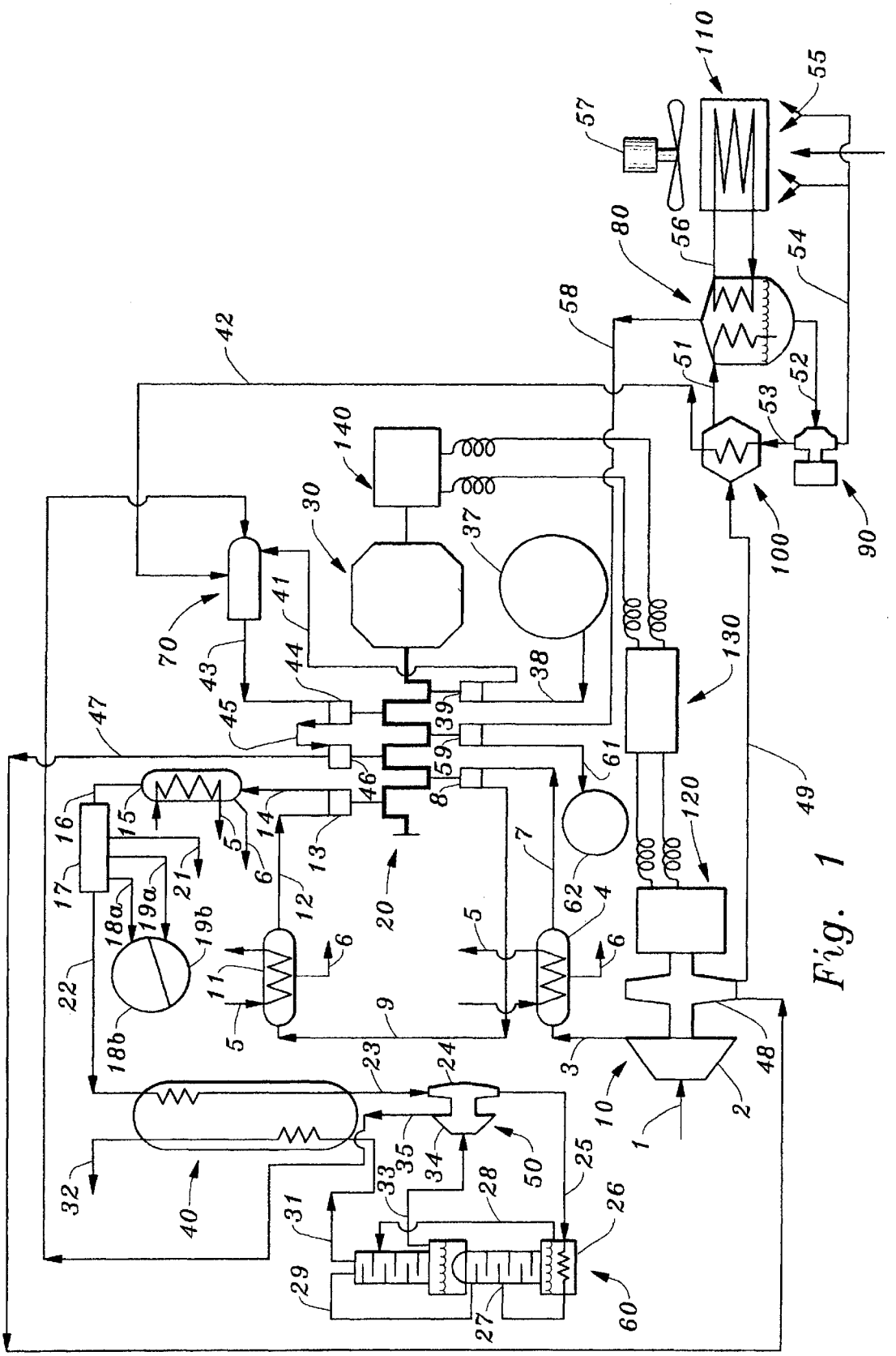
110
55
57
56
80
54
58
42
51
52
53
140
30
37
100
90
70
41
43
44
38
130
47
45
39
59
61
46
8
16
15
14
5
6
13
7
120
49
17
21
12
20
62
4
18a
19a
19b
22
11
9
18b
23
24
3
48
10
2
1
32
40
35
34
50
25
33
28
26
31
29
27
60

Fig. 1

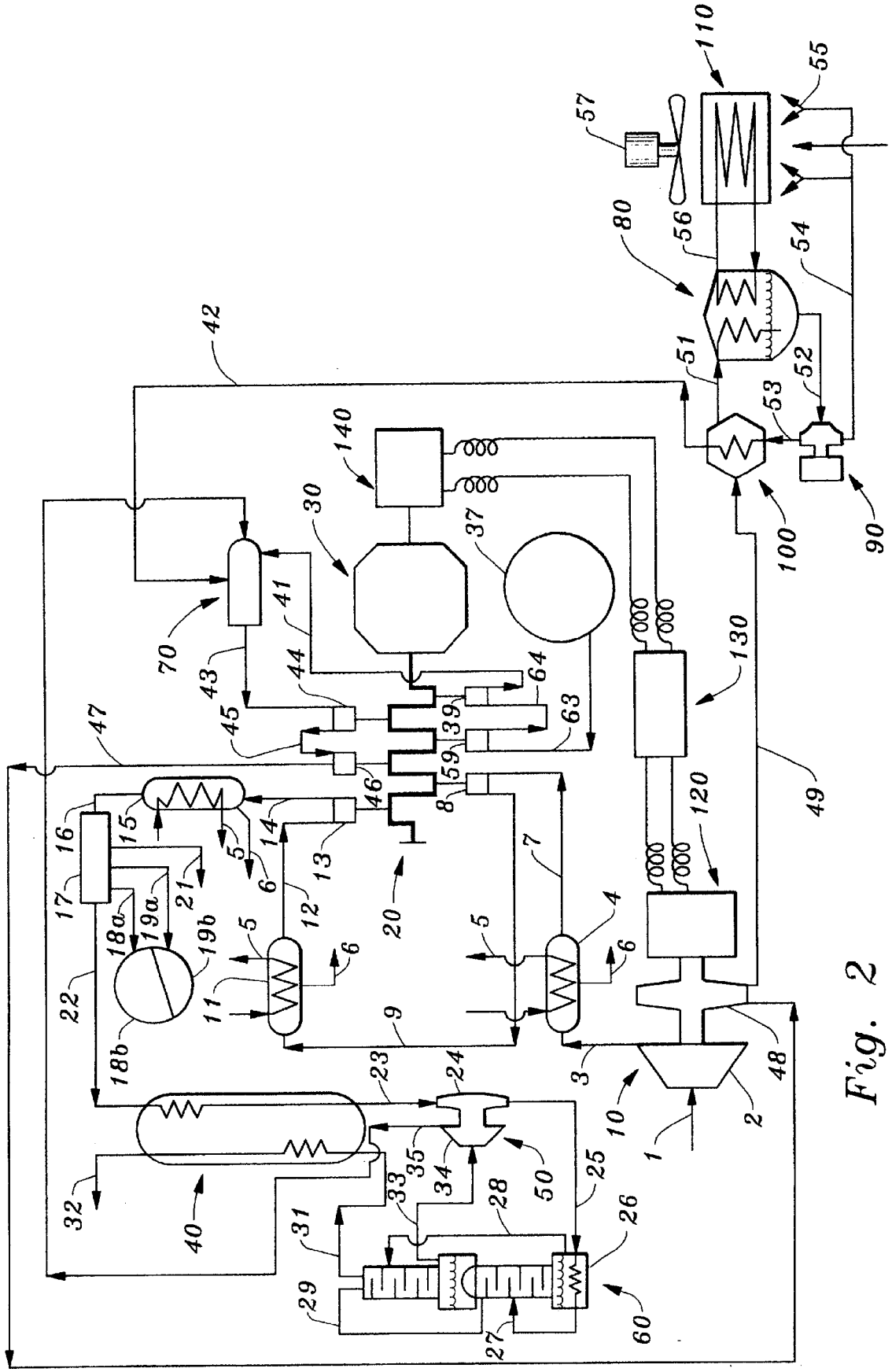
110
55
57
80
56
54
42
51
52
53
140
30
37
100
90
70
41
43
44
64
130
45
39
63
47
59
46
8
120
49
16
15
14
13
5
6
7
17
21
12
20
4
18a
19a
19b
22
11
9
3
48
18b
23
24
10
2
1
32
35
34
50
25
40
33
28
31
26
29
27
60

Fig. 2

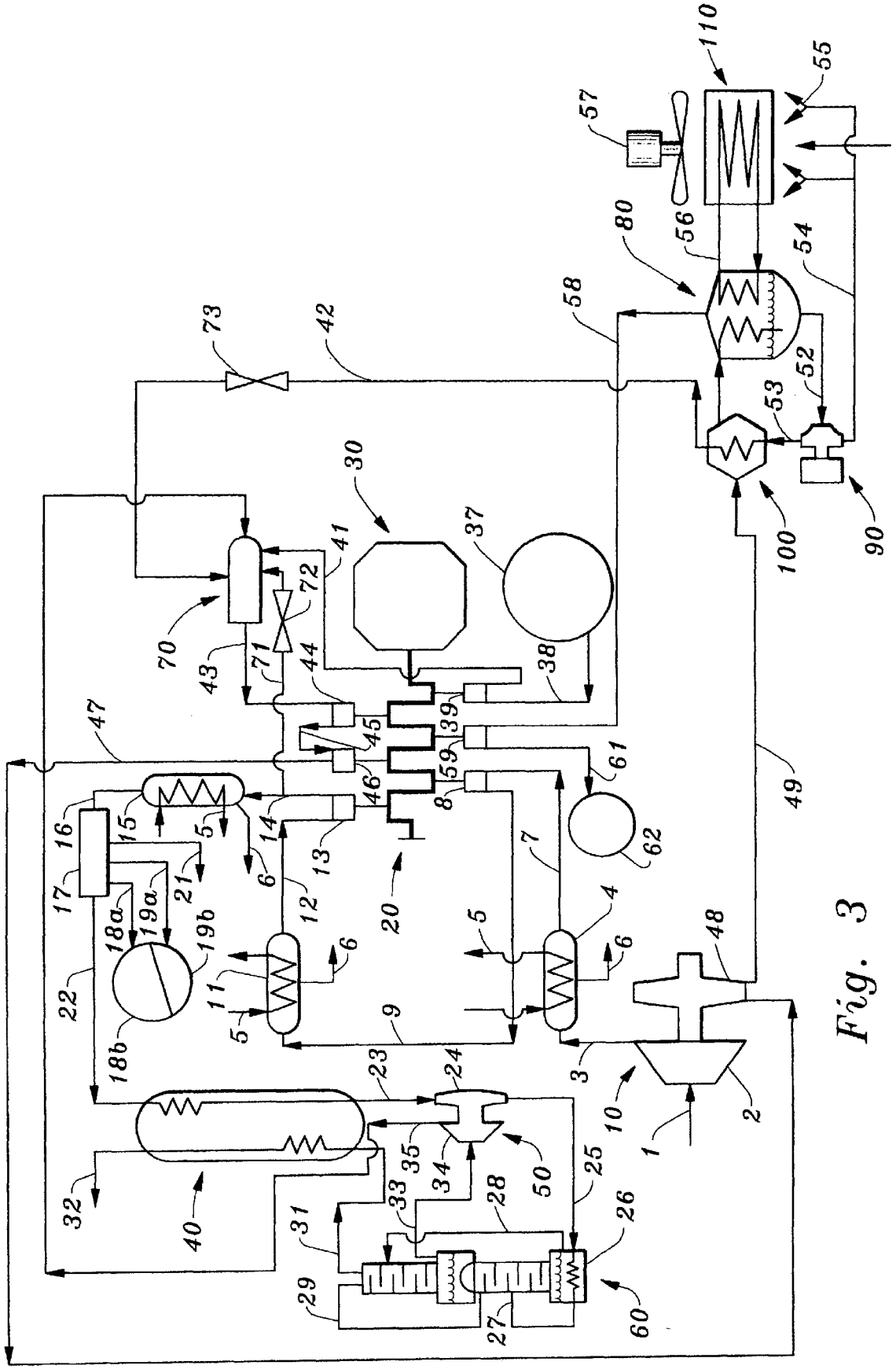
110
55
57
80
56
54
58
73
42
52
53
30
37
41
72
70
43
71
44
38
39
47
45
59
61
46
8
49
16
15
5
14
13
62
17
21
6
12
20
7
18a
19a
19b
4
48
22
11
9
18b
23
24
3
10
2
1
32
35
34
50
25
40
33
28
26
31
29
27
60

Fig. 3

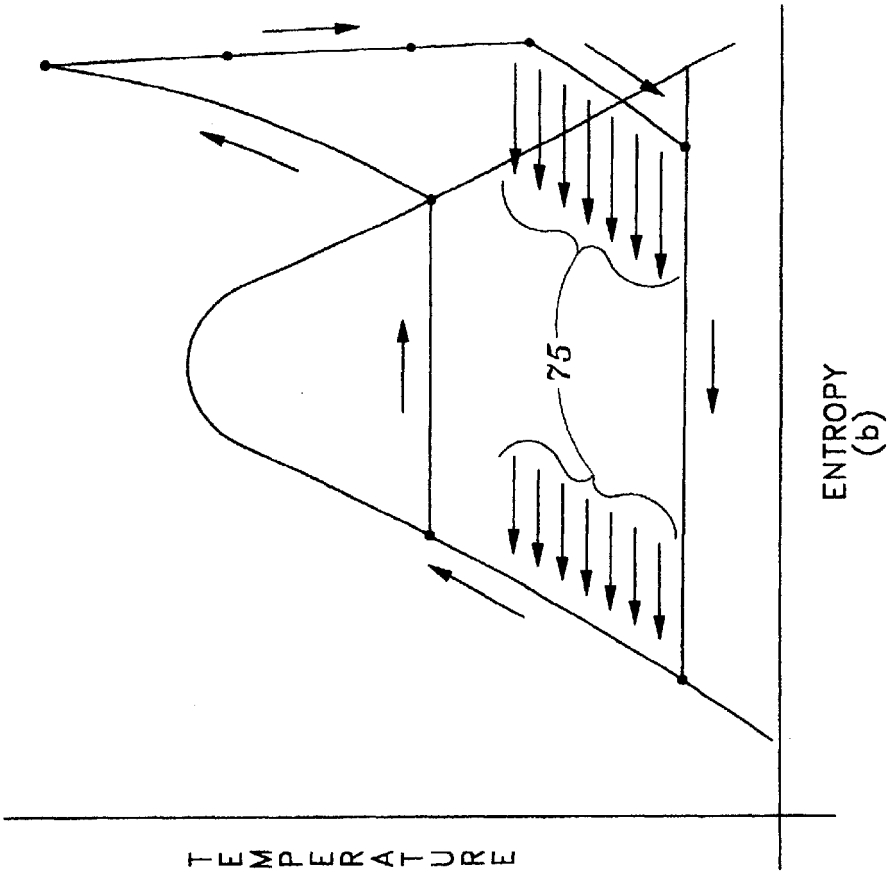


Fig. 5

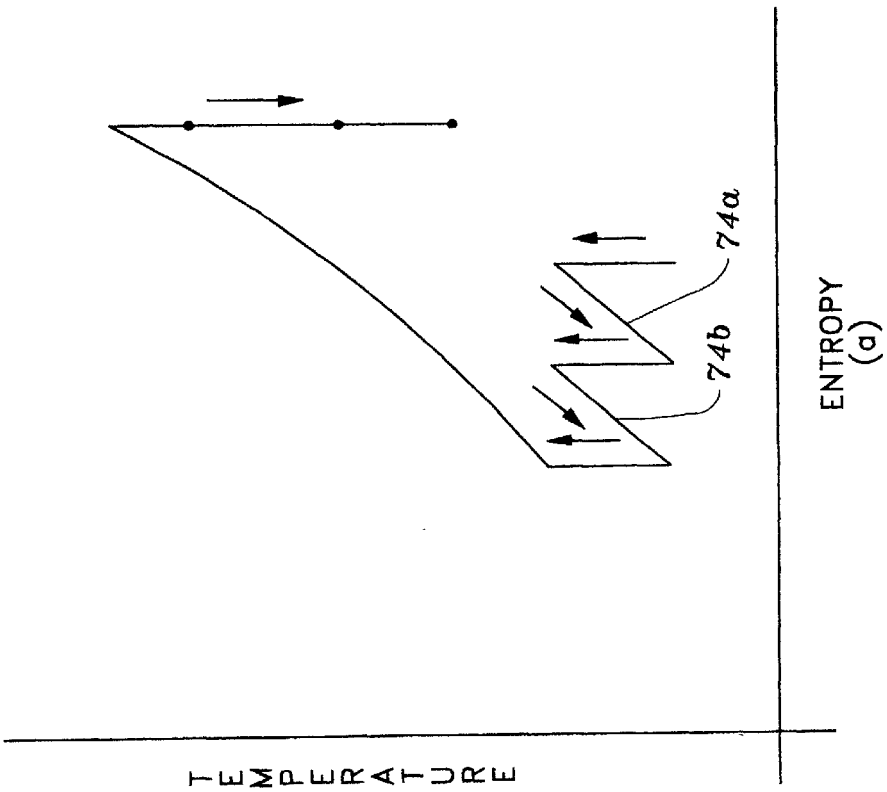


Fig. 4

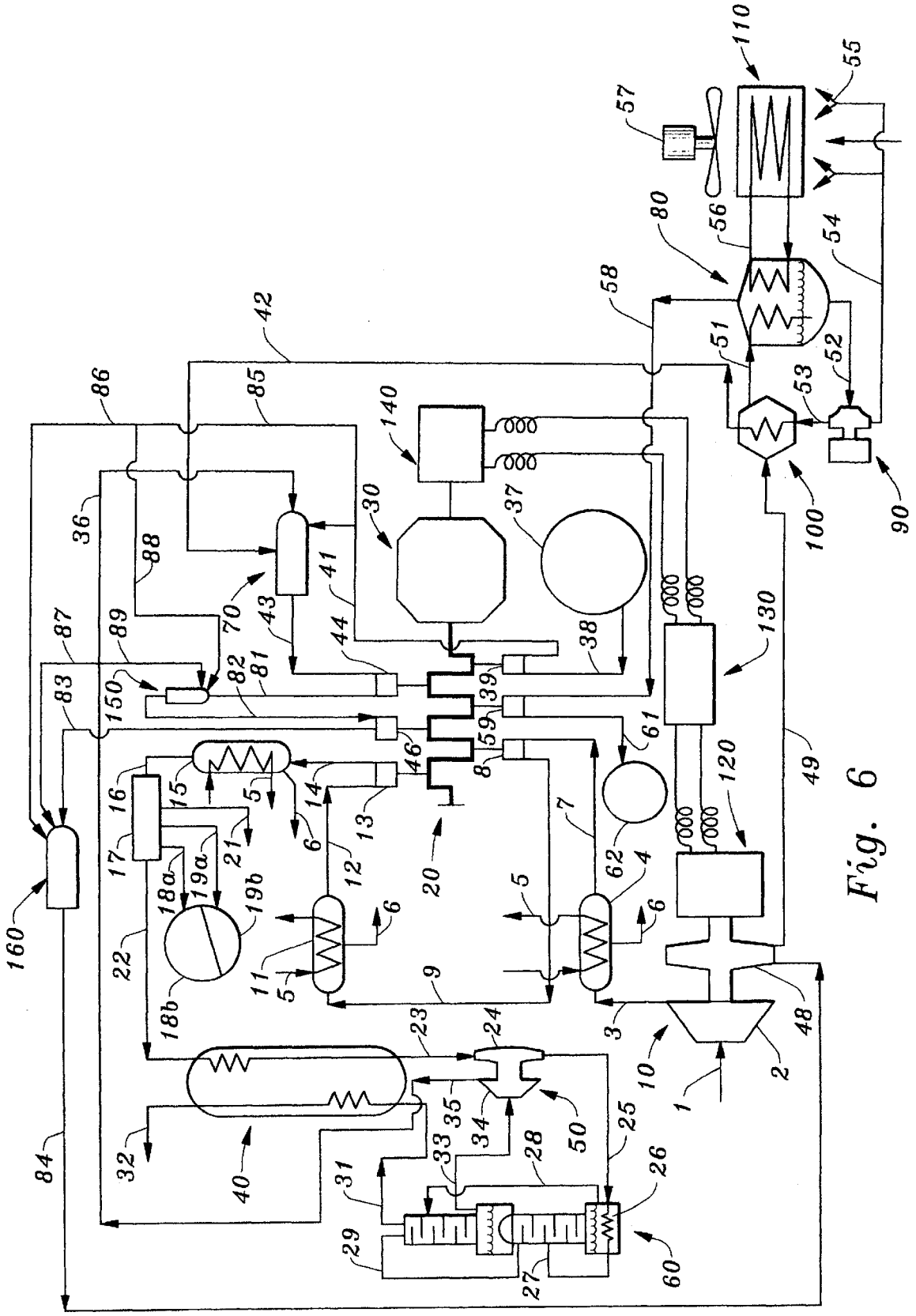
110
55
57
80
56
54
58
42
51
52
53
86
85
140
30
37
36
88
41
70
43
44
38
130
87
89
82
81
39
83
150
59
61
46
8
16
15
5
14
13
7
120
49
17
21
6
12
20
62
4
18a
19a
19b
160
22
11
9
3
48
18b
23
24
10
2
1
35
34
50
25
32
40
33
28
26
31
29
27
60
84

Fig. 6

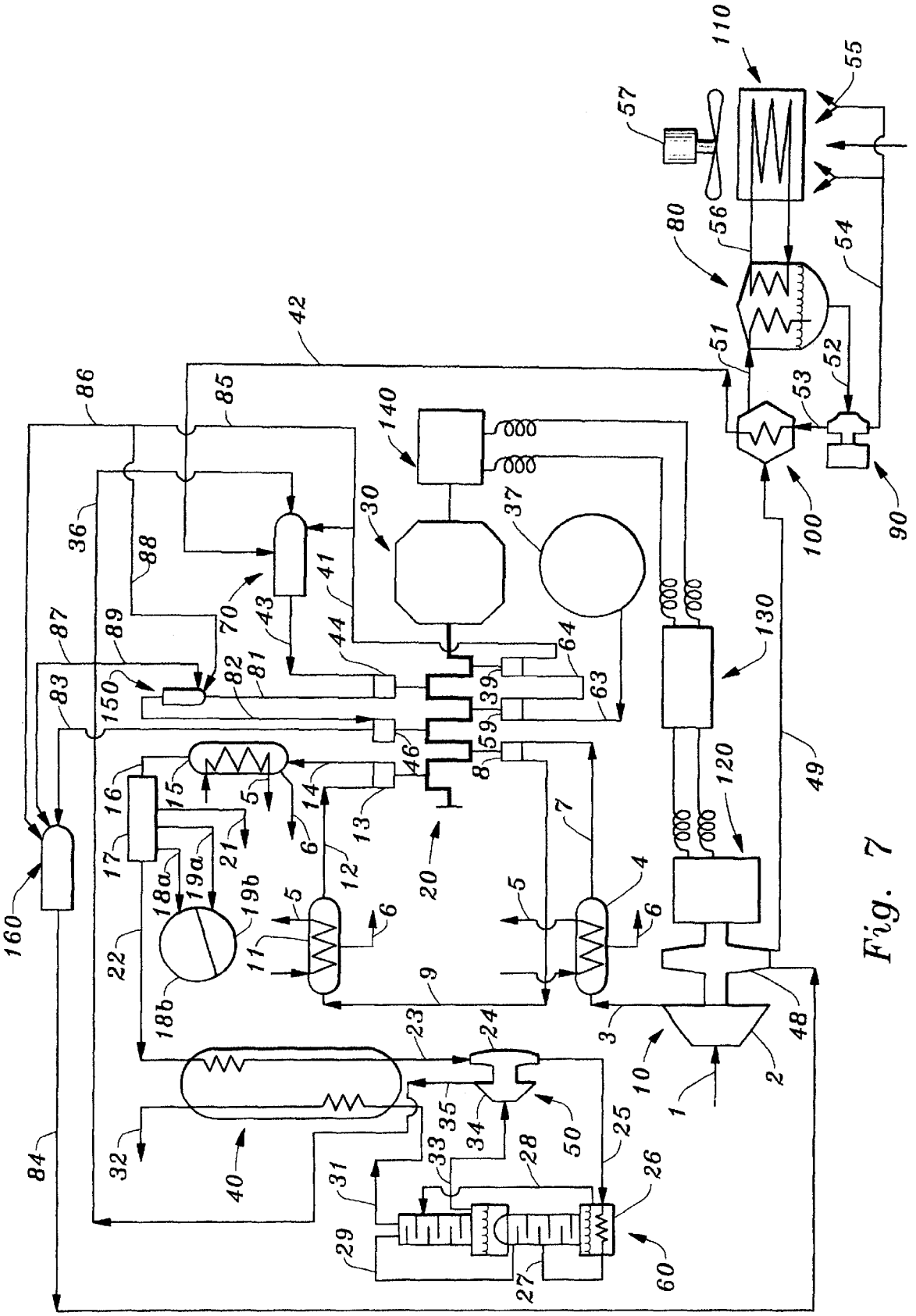

Fig. 7

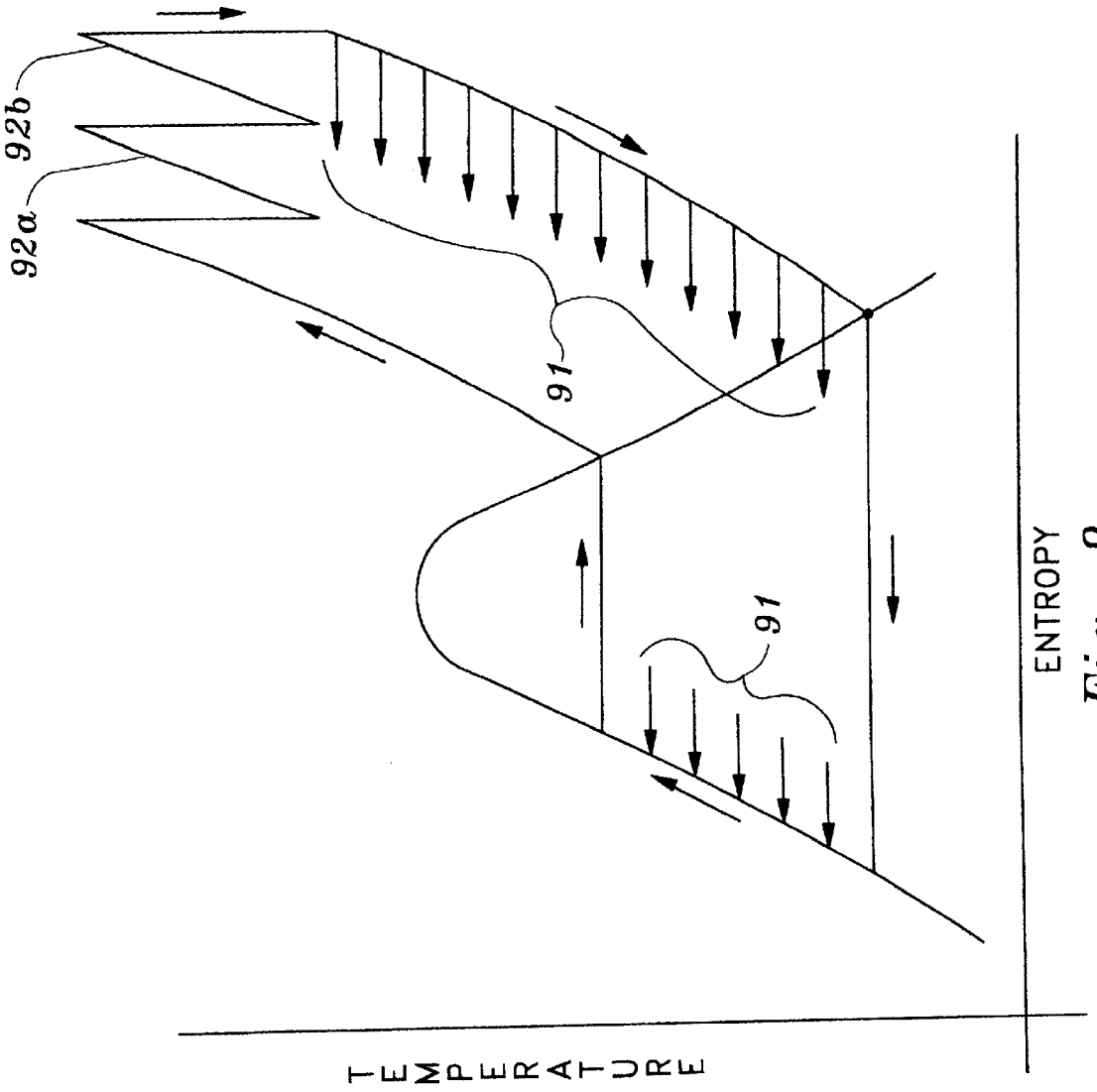


Fig. 8

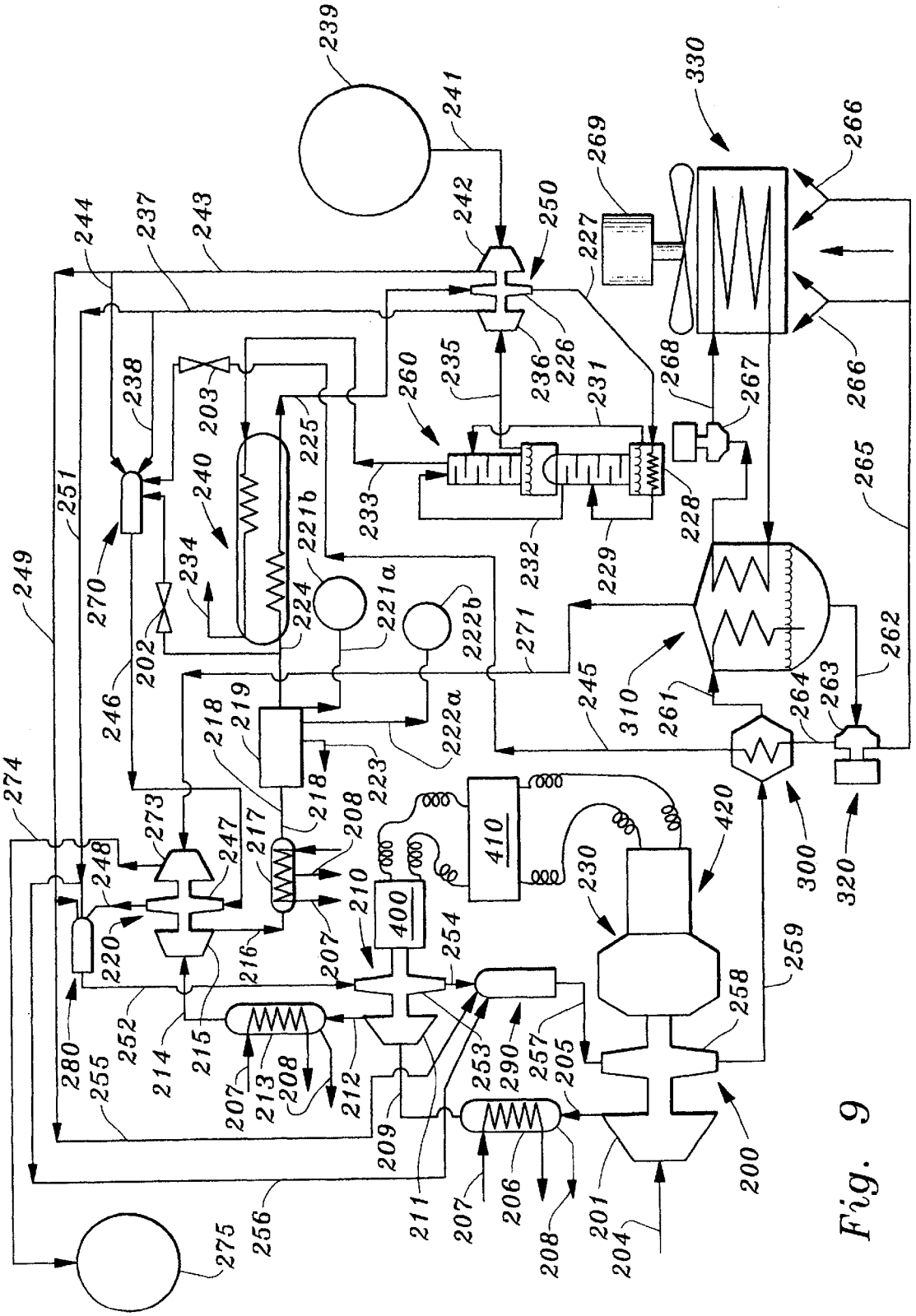
239
241
330
266
269
242
250
227
244
237
243
236
226
235
260
231
268
267
266
238
203
225
240
233
228
265
251
221b
232
229
249
270
234
224
221a
222b
271
262
202
246
218
219
222a
245
310
261
264
263
274
223
218
273
247
217
208
410
420
248
210
400
230
300
320
220
216
207
254
259
258
280
252
214
215
253
290
257
205
255
213
208
212
209
211
207
206
208
201
204
200
256
275

Fig. 9

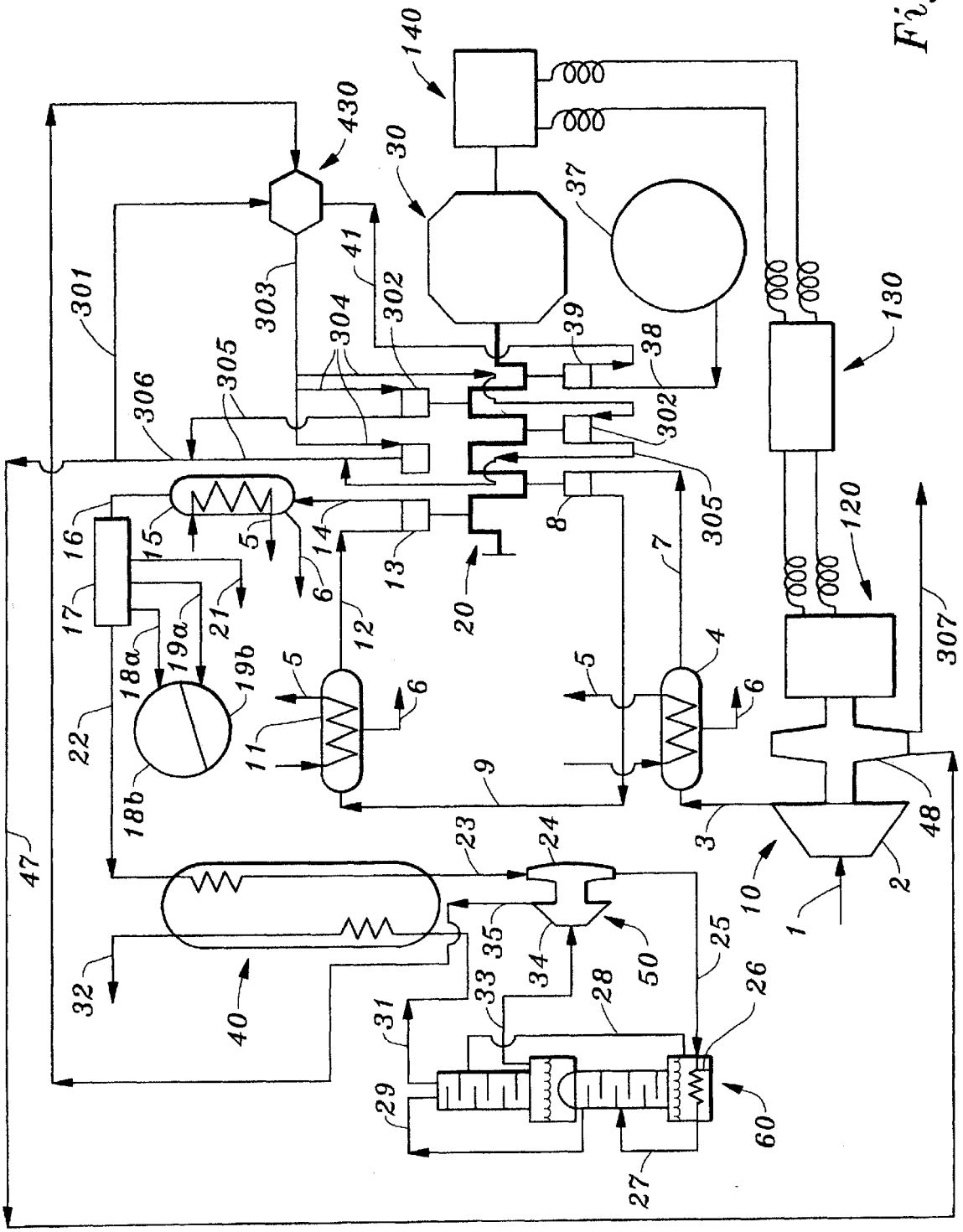
140
430
30
37
301
303
41
302
304
305
306
39
38
130
302
305
8
7
120
307
16
15
5
14
13
20
17
21
6
12
18a
19a
19b
5
6
5
4
6
22
11
9
18b
3
48
47
23
24
10
2
1
32
35
34
50
25
40
33
28
26
31
29
60
27

Fig. 10

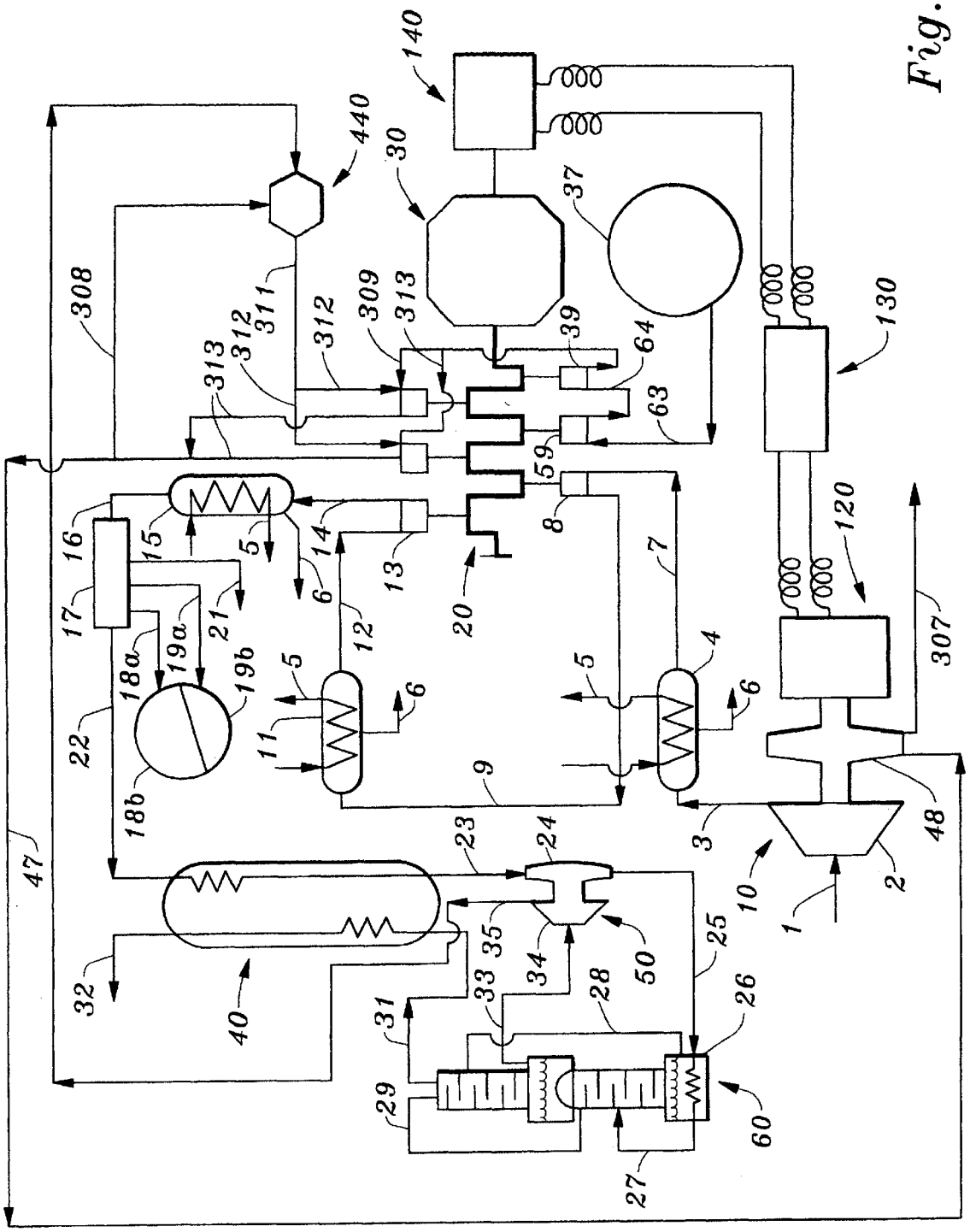
140
440
30
37
308
311
312
309
313
39
64
63
59
130
120
307
16
15
5
14
13
8
7
17
6
21
12
20
18a
19a
19b
22
18b
11
4
9
3
48
47
23
24
10
2
1
32
40
35
34
50
25
33
28
26
31
29
60
27

Fig. 11

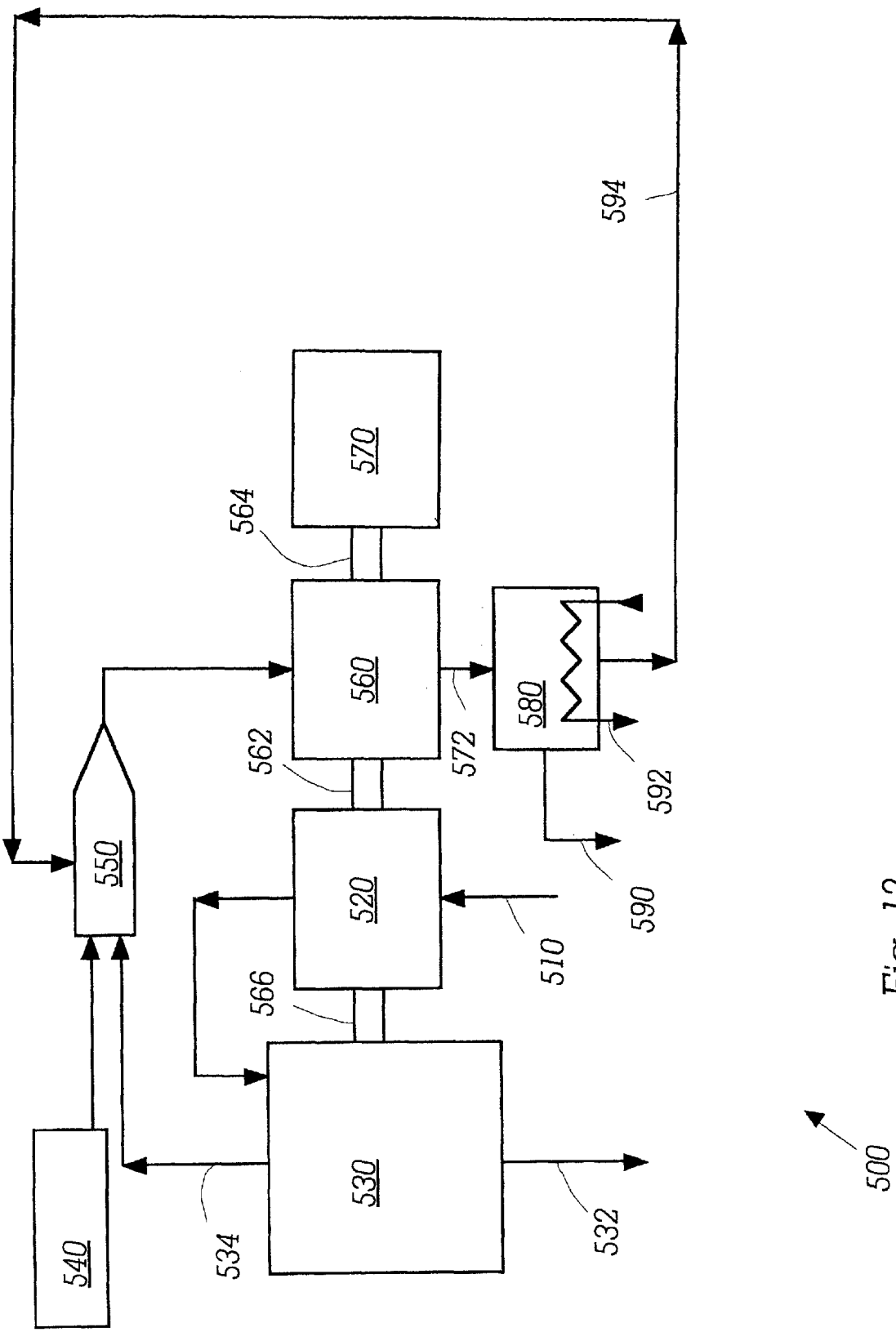
594
570
564
560
580
572
562
592
550
520
590
510
566
530
540
534
532
500

Fig. 12

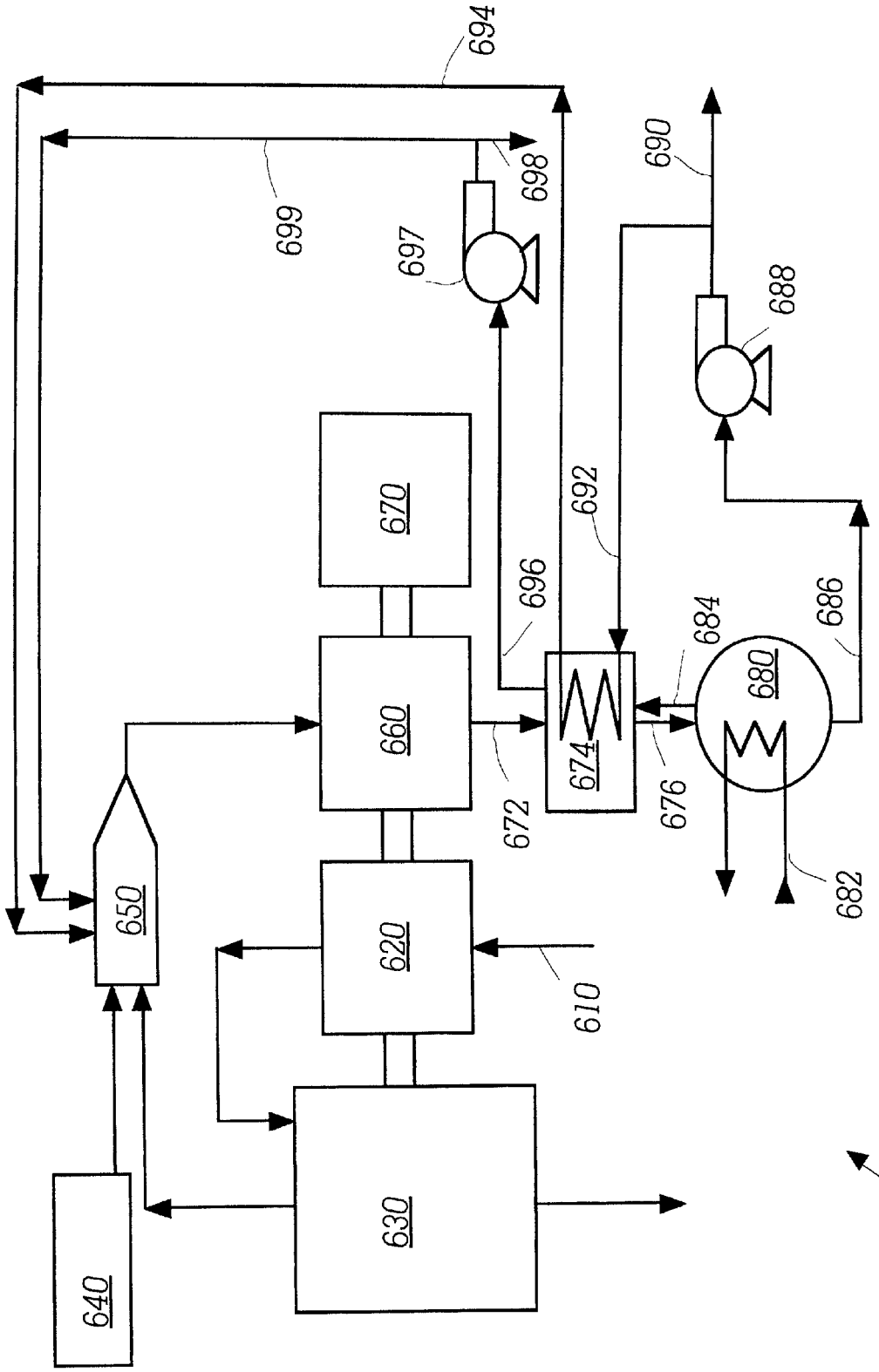
694
699
698
697
690
688
670
692
696
660
674
684
680
686
672
676
682
650
620
610
630
640
600

Fig. 13

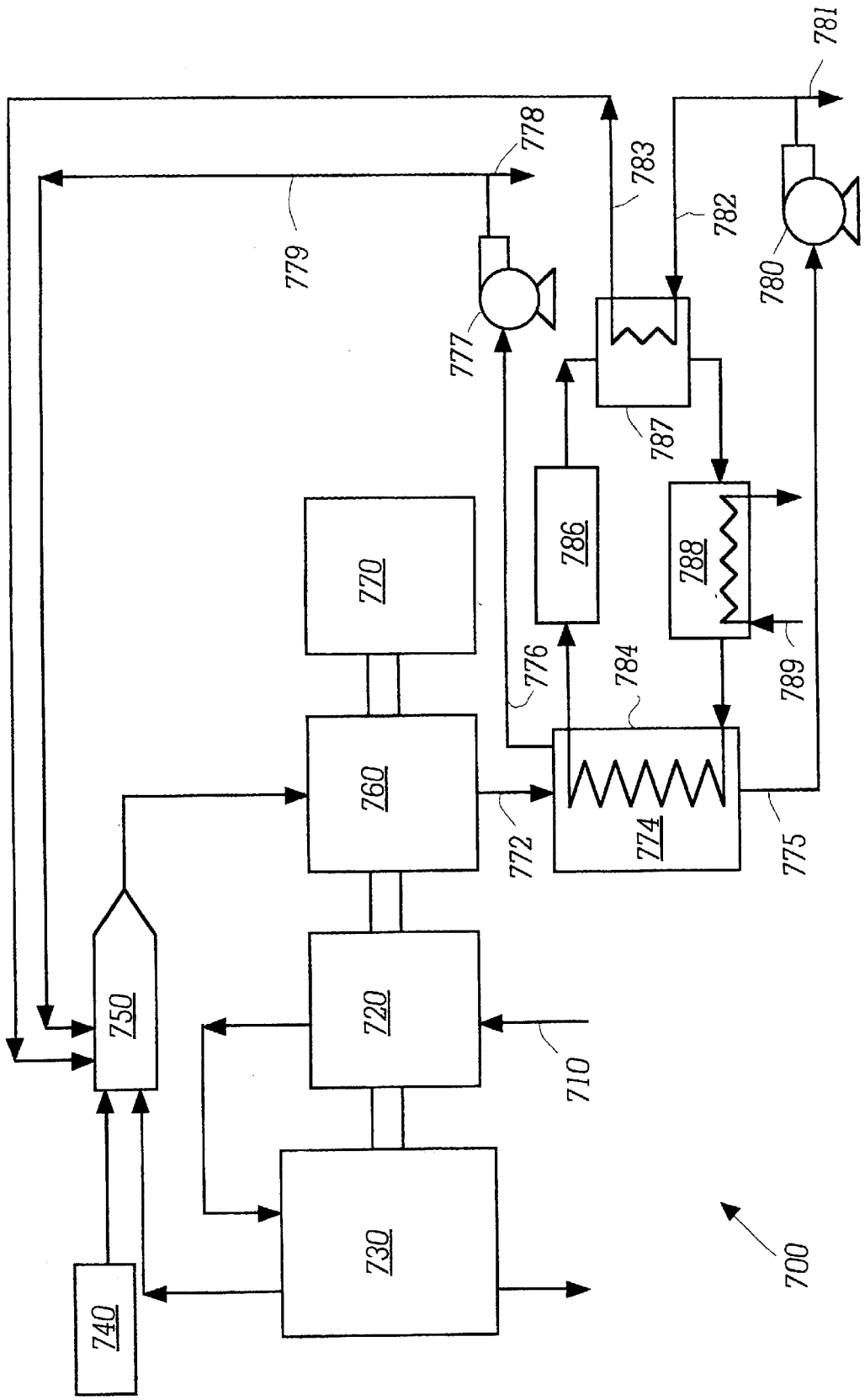
740
750
730
720
710
760
770
772
774
775
776
777
778
779
780
781
782
783
784
786
787
788
789
700

Fig. 14

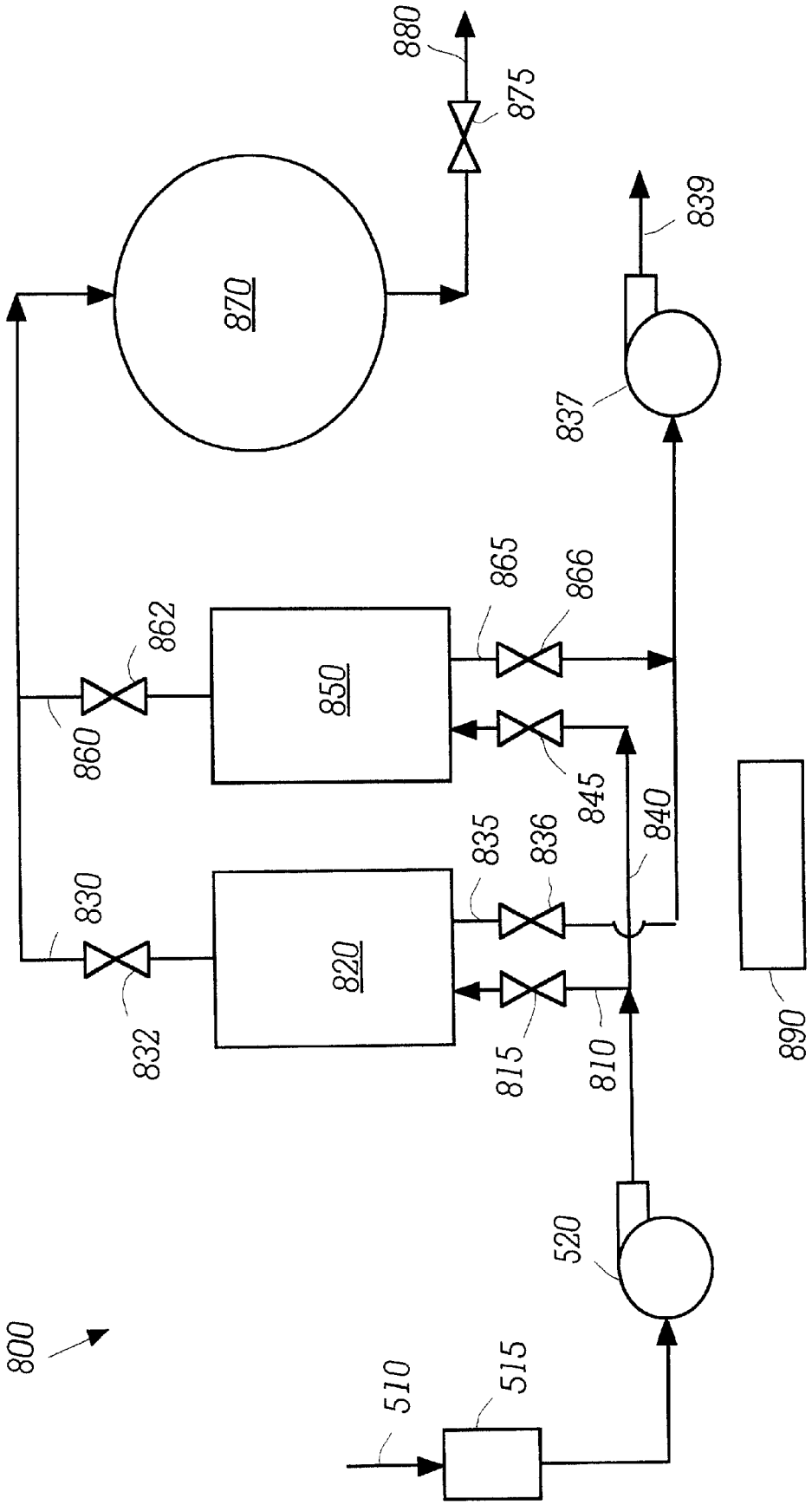
800
510
515
520
810
815
820
830
832
835
836
840
845
850
860
862
865
866
837
839
870
875
880
890

Fig. 15

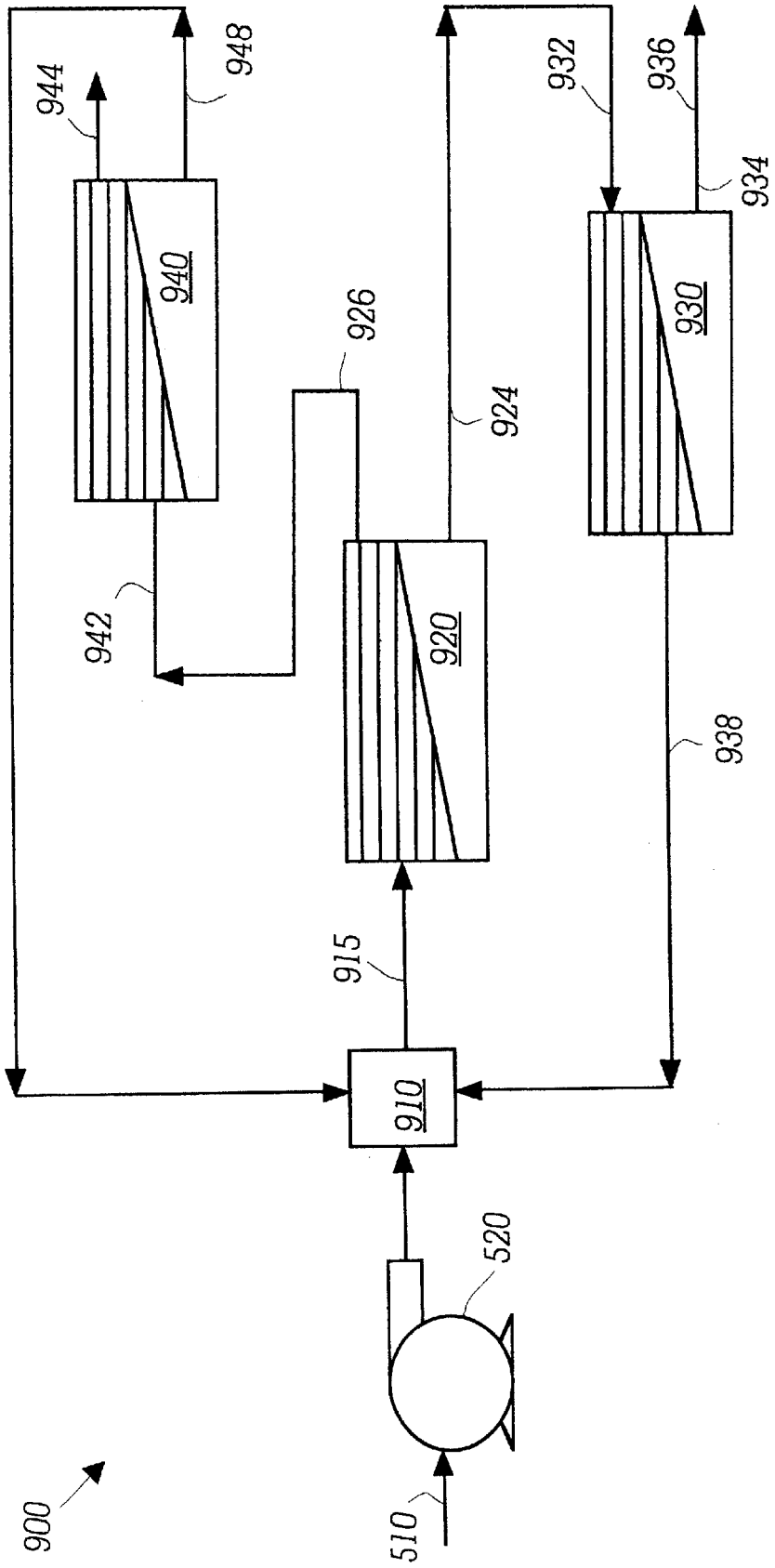
900
510
520
910
915
920
924
926
930
932
934
936
938
940
942
944
948

Fig. 16

# CLEAN AIR ENGINES FOR TRANSPORTATION AND OTHER POWER APPLICATIONS

## CROSS-REFERENCE TO RELATED APPLICATIONS

This application is a continuation of application Ser. No. 09/533,611 filed on Mar. 22, 2000, now U.S. Pat. No. 6,247,316, issued on Jun. 19, 2001 which claims priority from copending Patent Cooperation Treaty (PCT) International Application No. PCT/US97/17006 filed on Sep. 22, 1997 designating the United States; and is a continuation-in-part of U.S. Pat. No. 5,680,764 filed on Jun. 7, 1995 and issued on Oct. 28, 1997.

## FIELD OF THE INVENTION

This invention contains environmentally clean engine designs that emit zero or very low pollutant levels during operation. The CLEAN AIR ENGINE (CLAIRE) invention is directly applicable to both transportation type vehicles including automobiles, trucks, trains, airplanes, ships and to stationary power generation applications. The designs feature hybrid, dual cycle and single cycle engines.

## BACKGROUND OF THE INVENTION

The current art in generating power for transportation purposes basically utilize the internal combustion gas or diesel engine. The current art for electric power generation utilize gas turbines and/or steam turbines. These devices burn hydrocarbon fuels with air which contains (by weight) 23.1% oxygen, 75.6% nitrogen and the remaining 1.3% in other gases. The emissions resulting from the combustion of fuels for internal combustion engines (gasoline or diesel), with air contain the following pollutants that are considered damaging to our air environment. These smog causing pollutants, are: total organic gases (TOG); reactive organic gases (ROG); carbon monoxide (CO); oxides of nitrogen (NOx); oxides of sulfur (SOx); and particulate matter (PM). Approximately one half of the total pollutants emitted by all sources of air pollution in California are generated by road vehicles (Emission Inventory 1991, State of California Air Resources Board, prepared January 1994). The major source of this vehicle pollution comes from passenger cars and light to medium duty trucks.

No near term solutions appear in sight to drastically reduce the vast amount of air pollutants emitted by the many millions of automobiles and trucks operating today. Based on the State of California Air Resources Board study, the average discharge per person in California of the air pollutants from mobile vehicles, monitored by this agency during 1991 and reported in 1994, was approximately 1.50 lb/day per person. With a nationwide population of over 250,000,000 people, this data extrapolates to over 180,000 tons of air borne emissions per day being discharged in the USA by mobile vehicles. Also, the number of cars and miles that are being driven continue to increase, further hampering efforts to reduce smog causing pollutants.

Allowable emission thresholds are rapidly tightening by Federal and State mandates. These allowable emission reductions are placing severe demands on the transportation industry and the electric power generating industry to develop new and lower emission power systems.

Although considerable effort is being directed at improving the range of electric zero emission vehicles (ZEV) by developing higher energy capacity, lower cost storage batteries, the emission problem is been transferred from the vehicle to the electric power generating plant, which is also being Federally mandated (Clean Air Act Amendments of 1990) to reduce the same air toxic emissions as those specified for automobiles and trucks.



The current world wide art of generating power for consumers of electricity depends primarily on fossil fuel burning engines. These engines burn hydrocarbon fuels with air. As described above, combustion of fossil fuels with air usually produce combustion products that contain a number of pollutants. Current Unites States regulatory requirements prescribe the amounts of the atmospheric pollutants permitted in particular locations. Allowable pollutant thresholds are decreasing over time and thereby putting more and more pressure on industry to find better solutions to reduce these emissions of pollutants in the electric power generating industry and other power generating industries.

Other energy sources being developed to solve the emissions problem, by exploiting non combustible energy sources include fuel cells and solar cells. Developers are solving many of the technological and economic problems of these alternate sources. However, widespread use of these energy sources for vehicles and for electric power generating facilities do not appear to yet be practical.

## SUMMARY OF THE INVENTION

This invention provides a means for developing a zero or very low pollution vehicle (ZPV) and other transportation power systems (i.e. rail and ship), as well as a zero or low pollution electric power generating facility. The zero or very low pollution is achieved by removing the harmful pollutants from the incoming fuel and oxidizer reactants prior to mixing and burning them in a gas generator or combustion chamber. Sulfur, sulfides and nitrogen are major pollutants that must be removed from the candidate fuels: hydrogen, methane, propane, purified natural gas, and light alcohols such as ethanol and methanol. Since air contains 76% nitrogen by weight, it becomes a major source of pollution that also requires removal prior to combining it with the clean fuel.

Cleansing of the fuel is straightforward and requires no further elaboration. The separation of the oxygen from the nitrogen in the air, however, is accomplished in a variety of ways. For instance, nitrogen can be removed from air by the liquefaction of air and gradual separation of the two major constituents, oxygen and nitrogen, by means of a rectifier (to be described later in more detail). The separation of the gases relies on the two distinct boiling points for oxygen (162° R) and for nitrogen (139° R) at atmospheric pressure. Air liquefies at an intermediate temperature of (142° R).

Other nitrogen removal techniques include vapor pressure swing adsorption, and membrane based air separation. With vapor pressure swing adsorption, materials are used which are capable of adsorption and desorption of oxygen. With membrane based air separation, an air feed stream under pressure is passed over a membrane. The membrane allows one component of the air to pass more rapidly there through than other components, enriching the amount of different components on opposite sides of the membrane. Such membranes can be of a variety of different materials and use several different physical processes to achieve the desired separation of nitrogen out of the air.

One embodiment of this invention consists of a hybrid power system that combines a Rankine cycle thermal cycle with an auxiliary electric motor for start-up and chill-down requirements. The thermal power cycle of the engine begins

by compressing ambient air to high pressures, cooling the air during compression and during the expansion to liquid air temperatures in a rectifier where separation of the oxygen and nitrogen takes place. The cold gaseous nitrogen generated is used to cool the incoming air and then is discharged to the atmosphere at near ambient temperature. Simultaneously, the cold gaseous or liquid oxygen generated by the rectifier is pressurized to gas generator pressure levels and delivered to the gas generator at near ambient temperature. Fuel, gaseous or liquid, from a supply tank is pressurized to the pressure level of the oxygen and also delivered to the gas generator where the two reactants are combined at substantially the stoichiometric mixture ratio to achieve complete combustion and maximum temperature hot gases (6500° R). These hot gases are then diluted with water downstream in a mixing section of the gas generator until the resulting temperature is lowered to acceptable turbine inlet temperatures (2000° R).

The drive gas generated from this mixing process consists of high purity steam, when using oxygen and hydrogen as the fuel, or a combination of high purity steam and carbon dioxide (CO2), when using oxygen and light hydrocarbon fuels (methane, propane, methanol, etc.). Following the expansion of the hot gas in the turbine, which powers the vehicle or the electric power generating plant, the steam or steam plus CO2 mixture are cooled in a condenser to near or below atmospheric pressure where the steam condenses into water, thus completing a Rankine cycle. Approximately 75% of the condensed water is recirculated to the gas generator while the remainder is used for cooling and discharged to the atmosphere as warm water vapor. When using light hydrocarbons as the fuel, the gaseous carbon dioxide remaining in the condenser is compressed to slightly above atmospheric pressure and either converted to a solid or liquid state for periodic removal, or the gas can be discharged into the atmosphere when such discharge is considered non-harmful to the local air environment.

Since this thermal cycle requires time to cool the liquefaction equipment to steady state low temperatures, an electric motor, driven by an auxiliary battery, can be used to power the vehicle and initiate the Rankine cycle until chill-down of the liquefaction equipment is achieved. When chill-down is complete the thermal Rankine engine, connected to an alternator, is used to power the vehicle or stationary power plant and recharge the auxiliary battery.

The combination of these two power systems, also referred to as a hybrid vehicle, emit zero or very low pollution in either mode of operation. In addition, the electric motor battery is charged by the zero or very low pollution thermal Rankine cycle engine itself and thus does not require a separate electric power generating plant for recharge. This reduces the power demand from central power stations and also reduces a potential source of toxic air emissions.

In place of the electric drive motor and battery, the Rankine cycle engine, with the addition of a few control valves, can also be operated as a minimally polluting open Brayton cycle, burning fuel and incoming air to power the vehicle during the period necessary to allow the Rankine cycle engine liquefaction equipment time to chill-down. This feature is another embodiment of this invention.

The zero or very low pollution Rankine cycle engine can also be used in a single cycle thermal mode for vehicles with long duration continuous duty such as heavy trucks, trains, ships and for stationary power generation plants where the chill-down time is not critical to the overall operational cycle.

The adaptation of the Otto and Diesel thermal cycles to a low-polluting hybrid engine are also included as embodiments of this invention. By using these thermal cycles, the need for a condenser and recirculating water system are eliminated. Low temperature steam or steam/carbon dioxide gases are recirculated as the working fluid and therefore replace the function of the recirculating water quench of the Rankine cycle embodiments previously discussed.

## OBJECTS OF THE INVENTION

Accordingly, it is a primary object of the present invention to provide a low or zero pollution combustion based power generation system. Such a system can be used in transportation and stationary power environments. Many countries' governments regulate the amount of pollution which can be generated by power generation system. This invention addresses the need for reduced pollution combustion based power generation systems.

Another object of this invention is to provide a high efficiency combustion based power generation system.

Another object of the present invention is to provide a power generation system which can also produce water as a byproduct. In areas where water is scarce the water byproducts produced by this invention are particularly beneficial.

Another object of the present invention is to provide a combustion based power generation system which includes an air treatment plant for separating nitrogen from the air prior to use of the air to combust a hydrocarbon fuel, such that nitrogen oxides are reduced or eliminated as byproducts of combustion in the power generation system.

Other further objects of the present invention will become apparent from a careful reading of the included drawing figures, the claims and detailed description of the invention.

## BRIEF DESCRIPTION OF THE DRAWINGS

FIG. **1** is a schematic illustrating an embodiment of this invention and its elements, along with their connectivity. This embodiment constitutes a very low pollution or pollution-free hybrid power system for vehicular and other applications. The fuel reactant is a light hydrocarbon type such as methane propane, purified natural gas, and alcohols (i.e. methanol, ethanol).

FIG. **2** is a schematic illustrating an embodiment of this invention which is also a very low pollution or pollution-free hybrid power system for vehicular and other applications where the fuel is gaseous hydrogen.

FIG. **3** is a schematic illustrating an embodiment of this invention which is a very low pollution or pollution-free power system for vehicular and other applications during cruise and continuous duty. During start-up and a short period thereafter, the engine runs in an open Brayton cycle mode and thus emits some pollutants.

FIG. **4** is a plot of Temperature v. Entropy for the working fluid illustrating the first of two cycles used in the dual mode engine of FIG. **3**. This cycle is an open Brayton with inter-cooling between compressor stages (Mode I).

FIG. **5** is a plot of Temperature v. Entropy for the working fluid illustrating the second cycle used in the dual mode engine of FIG. **3**. This cycle is a Rankine with regeneration, (Mode II).

FIG. **6** is a schematic illustrating an embodiment of this invention and its interconnecting elements. This embodiment constitutes a very low pollution or pollution-free hybrid power system for vehicular and other applications similar to that of FIG. **1** but with the addition of two

reheaters to the power cycle for improved performance. The fuel reactant for this cycle is a light hydrocarbon.

FIG. **7** is a schematic illustrating an embodiment of this invention and its interconnecting elements. This embodiment constitutes a very low pollution or pollution-free hybrid power system similar to that of FIG. **2** but with the addition of two reheaters to the power cycles for improved performance. The fuel reactant for this cycle is hydrogen.

FIG. **8** is a plot of Temperature v. Entropy for the working fluid for the power cycle used for the thermal engines shown in FIG. **6** and FIG. **7**. This cycle features the Rankine cycle with regeneration and reheat for improved performance.

FIG. **9** is a schematic illustrating an embodiment of this invention that features a very low pollution or non-polluting hybrid engine with electric motor drive and a Rankine power cycle utilizing dynamic type turbomachinery. The Rankine power cycle utilizes regeneration and reheaters for increased cycle efficiency and power density.

FIG. **10** is a schematic illustrating an embodiment of this invention that features a low polluting hybrid engine with an electric motor drive and an Otto power cycle reciprocating engine.

FIG. **11** is a schematic illustrating an embodiment of this invention that features a low polluting hybrid engine with an electric motor drive and a Diesel power cycle reciprocating engine.

FIG. **12** is a schematic illustrating a basic low-polluting engine where a rectifier and air liquefaction devices of previous embodiments are replaced with an air separation plant which separates nitrogen from air by any of a variety of techniques including liquefaction, vapor pressure swing adsorption, membrane based air separation, etc.

FIG. **13** is a schematic similar to that which is shown in FIG. **12** but including regeneration in the cycle disclosed therein.

FIG. **14** is a schematic similar to that which is disclosed in FIGS. **12** and **13** except that a duel cycle arrangement is provided which features a bottoming cycle for enhanced efficiency.

FIG. **15** is a schematic of a typical pressure swing adsorption plant for use as the air separation plant in one of the engines disclosed in FIGS. **12–14**.

FIG. **16** is a schematic of a membrane flow two stage enrichment of oxygen and nitrogen system for use as part of the air separation plant of the cycles disclosed in FIGS. **12–14**.

## DESCRIPTION OF THE PREFERRED EMBODIMENT

According to the first embodiment of the present invention, a zero or very low pollution Rankine cycle thermal engine operating in parallel with a zero emissions electric motor (also referred to as a hybrid engine) is illustrated in FIG. **1**. The Rankine engine consists of a dynamic turbocompressor **10**, a reciprocating engine **20**, a power transmission **30**, a heat exchanger **40**, a turboexpander **50**, a rectifier **60**, a gas generator **70**, a condenser **80**, a recirculating water feed pump **90**, a water heater **100** and a condenser coolant radiator **110**. The electric engine consists of an alternator **120**, a battery **130** and electric motor **140**.

Hybrid engine operation begins by starting the electric motor **140** using the battery **130** as the energy source. The electric motor **140** drives the reciprocating engine **20** through the power transmission **30** and thereby initiates the start of the thermal engine that requires a chill-down period for the liquefaction equipment consisting of heat exchanger **40**, turboexpander **50** and rectifier **60**.

Activation of the thermal engine initiates the compression of ambient temperature air from a surrounding environment entering the dynamic compressor **2** through an air inlet duct **1**. The compressor **2** raises the air to the design discharge pressure. The air then exits through duct **3** into intercooler **4** where the heat of compression is removed by external cooling means **5** (i.e. air, water, Freon, etc.). Condensed water vapor from the air is tapped-off by drain **6**. After the air exits intercooler **4** through duct **7**, at a temperature equal to the compressor inlet, it enters the reciprocating compressor **8** and is raised to the design discharge pressure. The air exits through duct **9** into intercooler **11** and is again cooled to the inlet temperature of the compressor. This compression/cooling cycle is repeated as the air exits intercooler **11** through duct **12** and enters reciprocating compressor **13**, then exits through duct **14**, enters intercooler **15** and exits through duct **16**, to complete the air pressurization.

The high pressure, ambient temperature air then enters the scrubber **17** where any gases or fluids that could freeze during the subsequent liquefaction are removed. These gases and liquids include carbon dioxide (duct **18***a* and storage tank **18***b*), oil (line **19***a* and storage tank **19***b*) and water vapor (tap off drain **21**). The oil can be from a variety of sources, such as leakage from the air compression machinery. The dry air then exits through duct **22** and enters heat exchanger **40** where the air is cooled by returning low temperature gaseous nitrogen.

The dry air is now ready to pass through an air treatment device for the separation of nitrogen out of the air and to provide nitrogen free oxygen for combustion as discussed below. The dry air will contain, by weight, 23.1% oxygen, 75.6% nitrogen, 1.285% argon and small traces of hydrogen, helium, neon, krypton and xenon (total of 0.0013%). Argon has a liquefaction temperature of 157.5° R, which lies between the nitrogen and oxygen boiling points of 139.9° R and 162.4° R respectively. Therefore argon, which is not removed, will liquefy during the liquefaction process. The remaining traces of gases hydrogen, helium and neon are incondensable at temperatures above 49° R while krypton and xenon will liquefy; however, the trace amounts of these latter gases is considered insignificant to the following air liquefaction process.

The dry air then exits through duct **23** and enters the turboexpander **24** where the air temperature is further reduced to near liquid air temperature prior to exiting duct **25** and enters the rectifier **60** (a two column type design is shown). Within the rectifier, if not before, the air is cooled to below the oxygen liquefaction temperature. Preferably, a two column type rectifier **60** is utilized such as that described in detail in the work: *The Physical Principles of Gas Liquefaction and Low Temperature Rectification*, Davies, first (published by Longmans, Green and Co. 1949).

The air exits from the lower rectifier heat exchanger **26** through duct **27** at liquid air temperature and enters the rectifier's lower column plates where the oxygen/nitrogen separation is initiated. Liquid with about 40% oxygen exits through duct **28** and enters the upper rectifier column where a higher percentage oxygen concentration is generated. Liquid nitrogen at 96% purity is recirculated from the lower rectifier column to the upper column by means of duct **29**. Gaseous nitrogen at 99% purity (1% argon) exits through duct **31** and enters heat exchanger **40** where cooling of the incoming air is performed prior to discharging through duct

32 to the atmosphere at near ambient temperature and pressure. Gaseous or liquid oxygen at 95% purity (5% argon) exits through duct **33** and enters the turboexpander compressor **34** where the oxygen is pressurized to the design pressure. The high pressure oxygen then exits through duct **35** and enters the gas generator **70**.

A light hydrocarbon fuel (methane, propane, purified natural gas and light alcohols such as ethanol and methanol) exits the fuel supply tank **37** through duct **38** and enters the reciprocating engine cylinder **39** where the fuel is raised to the design discharge pressure. The fuel then exits through duct **41** and enters the gas generator **70** to be mixed with the incoming oxygen at the stoichiometric mixture ratio to achieve complete combustion and maximum hot gas temperature (approximately 6500° R). The gas generator includes an ignition device, such as a spark plug, to initiate combustion. While the gas generator **70** is the preferred form of fuel combustion device for this embodiment, other fuel combustion devices could also be used, such as those discussed in the alternative embodiments below. The products of combustion of these reactants result in a high purity steam and carbon dioxide gas and a small amount of gaseous argon (4%).

Following the complete combustion of the high temperature gases, recirculating water is injected into the gas generator **70** through line **42** and dilutes the high temperature gases to a lower temperature drive gas acceptable to the reciprocating engine (approximately 2000° R). This water influx also increases a mass flow rate of combustion products available for expansion and power generation. The drive gas then exits the gas generator **70** through discharge duct **43**, enters reciprocating cylinder **44**, expands and provides power to the power transmission **30**. Other combustion product expansion devices can replace the reciprocating cylinder **44**, such as the dynamic turbines discussed in the sixth embodiment below. The gas exits through duct **45**, enters the second cylinder **46**, expands and also provides power to the power transmission; the gas exits through duct **47** and powers the dynamic turbine **48** which drives the centrifugal compressor **2**, which was driven by the electric motor **140** during start-up, and the alternator **120** to recharge the battery **130**.

The gas then exits through duct **49**, enters the water heater **100** where residual heat in the gas is transferred to the recirculating water being pumped by pump **90**, the water heater gas exits through duct **51**, enters the condenser **80** at near or below atmospheric pressure, where condensation of the steam into water and separation of the carbon dioxide takes place. The condensed water exits through line **52**, enters the pump **90** where the pressure of the water is raised to the gas generator **70** supply pressure level. A major portion of the pump **90** discharge water exits through line **53**, enters the water heater **100** where heat is transferred from the turbine **48** exhaust gas and then exits through line **42** for delivery to the gas generator **70**. The remaining water from the discharge of pump **90** exits through duct **54** and is sprayed through nozzles **55** into radiator **110** (evaporative cooling). Coolant for the condenser gases is recirculated through duct **56** to the radiator **110** where heat is rejected to atmospheric air being pumped by fan **57**.

The gaseous carbon dioxide, remaining after the condensation of the steam, exits the condenser **80** through duct **58** and enters the reciprocating cylinder **59**, (when the condenser pressure is below atmospheric) compressed to slightly above atmospheric pressure and discharged through duct **61**. The compressed carbon dioxide can be stored in storage tank **62** and converted to a solid or liquid state for periodic removal; or the gas can be discharged into the atmosphere when such expulsion is permitted.

It should be noted that this hybrid engine generates its own water requirements upon demand and thus eliminates the freezing problem of a steam Rankine cycle in a cold (below freezing) environment. Also, the engine generates its oxidizer requirements on demand and thus eliminates many safety concerns regarding oxygen storage.

A second embodiment of this invention, illustrated in FIG. **2**, features a hybrid engine when using hydrogen in place of a hydrocarbon fuel. When using hydrogen as the fuel no carbon dioxide is generated and only high purity steam exits from the gas generator **70**. Consequently all systems related to carbon dioxide are deleted, and no other changes are basically required. However, to maintain the same six cylinder engine of FIG. **1**, the hydrogen fuel FIG. **2** exits the fuel supply tank **37** through duct **63**, enters reciprocating engine cylinder **59**, exits through duct **64**, enters reciprocating engine cylinder **39**, exits through duct **41** and is delivered to the gas generator **70**. This permits two stages of compression for the low density hydrogen.

A third embodiment of this invention, illustrated in FIG. **3**, features a dual cycle engine where a Brayton cycle is used for start-up and chill-down of the air liquefaction equipment (Mode I) and a Rankine cycle is used for cruise, idle and continuous duty (Mode II). To incorporate this feature, high pressure air is tapped-off from cylinder **13** (air pressurization as previously described for embodiment one) by means of bypass air duct **71** and modulated by valve **72**. Also, recirculating water to the gas generator is modulated by means of valve **73** to control the combustion temperature of the fuel and oxygen and the exit temperature of the gaseous mixture being delivered to power the cycle through duct **43**.

The thermodynamic cycles for these two operating Modes are illustrated in FIG. **4** and FIG. **5**. The working fluid for power cycle operation in Mode I consists of steam, carbon dioxide and gaseous air. When operating in Mode II the working fluid (as discussed in embodiment one and two) consists of steam and carbon dioxide when using hydrocarbon fuel and steam only when using hydrogen.

An open Brayton cycle, illustrated in FIG. **4**, with two stages of intercooling the compressed air, **74***a*, and **74***b*, is used to power the engine during Mode I and initiates the chill-down of the liquefaction equipment for subsequent Mode II operation of the Rankine cycle with regeneration **75**, illustrated in FIG. **5**. Note that this embodiment eliminates the need for an electric motor, battery and alternator.

A fourth embodiment of this invention, illustrated in FIG. **6**, includes all the elements of the first embodiment and adds two reheaters **150** and **160** to improve the performance of this engine. While two reheaters **150**, **160** are shown, any number of reheaters can be utilized depending on the requirements of each specific application.

The engine operates as described for the first embodiment but with the following changes. Hot gases exiting reciprocating cylinder **44** exit through duct **81**, enter the reheater **150** where additional light hydrocarbon fuel and oxygen is injected through ducts **88** and **89** respectively. The heat of combustion of these reactants within the reheater **150** raises the incoming gas temperature to the level of the gas generator **70** output. The reheated gas then exits reheater **150** through duct **82**, enters reciprocating cylinder **46**, expands and exits through duct **83** and enters reheater **160** where additional oxygen and fuel is injected. The heat of combustion of these reactants within the reheater **160** again raises the incoming gas temperature to the same level as at the gas

generator **70** output. The heated gas then exits through duct **84** and enters the dynamic turbine **48**, as described previously in the first embodiment. Fuel for the reheater **160** is supplied through duct **86**. The oxygen is supplied through duct **87**.

A fifth embodiment of this invention, illustrated in FIG. **7**, includes all the elements of the second embodiment and adds two reheaters **150** and **160** to improve the performance. This engine operates as described for embodiment four except this engine uses hydrogen fuel. The Rankine cycle of these embodiments using regeneration and reheats is illustrated in FIG. **8**. Regeneration is illustrated by **91** and the two reheats are illustrated by **92***a* and **92***b*.

A sixth embodiment of this invention; illustrated in FIG. **9**, is similar to the fourth embodiment featuring reheaters, illustrated in FIG. **6**, except all the machinery consists of dynamic type compressors and turbines. This type of machinery is more suitable for higher power levels (>1000 Shaft Horsepower (SHP)) required for rail, ship or standby power systems.

The Rankine engine consists of dynamic turbocompressors **200**, **210**, and **220**, a power transmission **230**, a heat exchanger **240**, a turboexpander **250**, a rectifier **260**, a gas generator **270**, a first reheater **280**, a second reheater **290**, a water heater **300**, a condenser **310**, a recirculating pump **320** and a condenser coolant radiator **330**. The electric engine consists of an alternator **400**, a battery **410** and electric motor **420**.

Engine operation begins by starting the electric motor **420** using the battery **410** as the energy source. The electric motor **420** drives the dynamic compressor **201** through power transmission **230**, and simultaneously, valve **202** is opened and valve **203** is closed. This initiates the start of the engine in a Brayton cycle mode. As engine speed increases valve **202** is gradually closed and valve **203** is gradually opened to slowly transition into the Rankine cycle mode and permit the liquefaction equipment to chill down. During this transitional period the electric motor **420** is used to maintain scheduled power and speed until steady state Rankine cycle conditions are achieved.

During thermal engine activation air enters turbocompressor **201** through duct **204** and is raised to the design discharge pressure. The air then exits through duct **205** into intercooler **206** where the heat of compression is removed by external cooling means **207** (i.e. air, water, Freon, etc.). Condensed water vapor is tapped-off by drain **208**. After the air exits intercooler **206** through duct **209** at a temperature equal to the compressor inlet, it enters compressor **211** and is raised to the design discharge pressure. The air then exits through duct **212** into intercooler **213** and is again cooled to the inlet temperature of the compressor **201**. This compression/cooling cycle is repeated as the air exits intercooler **213** through duct **214**, enters compressor **215**, then exits through duct **216**, enters intercooler **217** and exits through duct **218** to complete the air pressurization.

The high pressure ambient temperature air then enters scrubber **219** where gases and fluids that are subject to freezing during the liquefaction process are removed (i.e. carbon dioxide, water vapor and oil). Carbon dioxide exits through duct **221***a* and is processed and stored in reservoir **221***b*. Oil is drained through duct **222***a* and stored in reservoir **222***b*. Water vapor is drained through duct **223** and discharged overboard.

The dry air then exits through duct **224** and enters the heat exchanger **240** where the air is cooled by returning gaseous nitrogen. It then exits through duct **225** and enters turboexpander **226** where the air temperature is further reduced to near liquid air temperature prior to exiting through duct **227** and enters the rectifier **260**. The air exits from the rectifier heat exchanger **228** through duct **229** at liquid air temperature and enters the rectifier's lower column plates where oxygen/nitrogen separation is initiated. Liquid with 40% oxygen exits through duct **231** and enters the upper rectifier column where a higher percentage oxygen concentration is generated. Liquid nitrogen at 96% purity is recirculated from the lower rectifier column to the upper column by means of duct **232**. Gaseous nitrogen at 99% purity (1% argon) exits through duct **233** and enters the heat exchanger **240** where cooling the incoming dry air is performed prior to discharging through duct **234** to the atmosphere at near ambient temperature and pressure. Gaseous oxygen or liquid oxygen at 95% purity (5% argon) exits through duct **235** and enters the turboexpander compressor **236** where the oxygen is pressurized to the design pressure. The high pressure oxygen then exits through duct **237** and enters the gas generator **270** through duct **238**.

Fuel, i.e. methane, propane, purified natural gas and light alcohols such as methanol and ethanol, exits the fuel supply tank **239** through duct **241** and enters the compressor **242** of turboexpander **250** and is raised to the design discharge pressure. The pressurized fuel then exits through duct **243** and enters the gas generator **270** through duct **244** where it mixes with the incoming oxygen at stoichiometric mixture ratio to achieve complete combustion and maximum hot gas temperature (approximately 6500° R). The products of combustion of these reactants result in a high purity steam, carbon dioxide gas and a small amount of gaseous argon (4%).

Following complete combustion of the high temperature gases, recirculating water is injected into the gas generator through line **245** and dilutes the high temperature gases to a lower temperature drive gas acceptable to the dynamic turbine **247** (approximately 2000° R). The drive gas then exits the gas generator **270** through duct **246** and enters the turbine **247** of turbocompressor **220**, where the gas expands and powers the air compressor **215** and the carbon dioxide compressor **273**. The gas then exits through duct **248** and enters reheater **280** where the heat extracted due to the turbine **247** work is replenished. This heat is derived from the combustion of added fuel through duct **249** and added oxygen through duct **251** into reheater **280**.

The reheated gas then exits through duct **252** and enters turbine **253** of turbocompressor **210** and expands to lower pressure. The power produced by these expanding gases drive the alternator **400** and compressor **211**, then exhaust through duct **254** and enter reheater **290**. The heat extracted from the gases resulting in the turbine work is replenished with the heat of combustion from added fuel through duct **255** and oxygen through duct **256**.

The reheated gas then exits through duct **257**, enters turbine **258** of turbocompressor **200** and drives compressor **201** and power transmission **230**. The turbine exhaust gas then exits through duct **259** and enters water heater **300** where the residual heat of the turbine **258** exhaust is used to preheat the water that is being recirculated to the gas generator **270**. The gas then exits through duct **261**, enters the condenser **310** near or below atmospheric pressure, where condensation of the steam into water and separation of the carbon dioxide gas occurs.

The condensed water exits through line **262**, enters the pump **263** where the pressure is raised to the supply level of the gas generator **270**. A major portion of the discharge water

from pump **263** exits through line **264**, enters the water heater **300** where heat is absorbed from the turbine exhaust gas and then exists through line **245** for delivery to the gas generator **270**. The remaining water from the discharge of pump **263** exits through line **265** and is sprayed through nozzles **266** into radiator **330** for evaporative cooling. Coolant for the condenser gas is recirculated by pump **267** to the radiator **330** through line **268**, where heat is rejected to atmospheric air being pumped by fan **269**.

The gaseous carbon dioxide, remaining from the condensation of steam, exits through duct **271** and enters compressor **273** of turbocompressor **220** and is compressed to slightly above atmospheric pressure (when condenser pressure is below atmospheric) and discharged through duct **274** into storage tank **275**. The compressed carbon dioxide can be converted into a liquid or solid state for periodic removal, or the gas can be discharged into the atmosphere as local environmental laws permit.

The seventh embodiment of this invention, illustrated in FIG. **10**, includes the liquefaction system of the previous embodiments but utilizes the intermittent but spontaneous combustion process of the Otto cycle as the thermal power engine. This embodiment eliminates the need for the steam condenser and the recirculating water system.

The Otto cycle steam or steam/CO2 thermal engine consists of, in addition to the liquefaction system previously described, a premixer **430** where oxygen from duct **35**, fuel from duct **41** and recirculating steam or steam/CO2 from duct **301** are premixed in the approximate ratio of 20%, 5% and 75% by weight respectively. These premixed gases are then directed to the reciprocating pistons **302** through duct **303** and ducts **304** where they are compressed and ignited with a spark ignition system identical to current Otto cycle engines. After the power stroke, the steam or steam/CO2 gases are discharged to the dynamic turbine **48** through ducts **305**, **306** and then into duct **47**. Some of the discharge gases are directed back to the premixer **430** through duct **301**. The exhaust gases from the dynamic turbine **48** are then discharged to the atmosphere through duct **307**.

The eighth embodiment of this invention, illustrated in FIG. **11**, is similar to the seventh embodiment, except a Diesel power cycle is used. In this system a premixer **440** mixes the oxygen from duct **35** with steam or steam/CO2 from duct **308**, at an approximate mixture ratio of 23% and 77% by weight respectively, and discharges the gaseous mixture to the reciprocating pistons **309** through duct **311** and ducts **312** where the mixture is compressed to a high pre-ignition temperature. The high pressure fuel, at approximately 5% of the total weight of the gas mixture in the piston cylinder, is injected through ducts **313** and burns at approximately constant pressure. If necessary, an ignition device is located within the combustion cylinder. The hot gases then rapidly expand as the piston moves to the bottom of its power stroke. The steam/CO2 gases are then discharged into ducts **313** and delivered to the dynamic turbine **48** through duct **47**. Some of the discharged gases are diverted to the premixer **440** through the duct **308**. The exhaust gases from the dynamic turbine **48** are then discharged into the atmosphere through duct **307**.

FIG. **12** depicts a basic low-polluting engine **500** which conceptually represents many of the above-described first eight embodiments in a more simplified manner. Rather than identifying specific machinery, FIG. **12** depicts steps in the overall power production cycle. Additionally, the engine **500** of FIG. **12** replaces the rectifier and other liquefaction equipment of embodiments 1–8 with a more generalized air separation plant **530**. Details of various different embodiments of this air separation plant **530** are provided in FIGS. **15** and **16** and described in detail herein below.

The basic low-polluting engine **500** operates in the following manner. Air from a surrounding environment enters through an air inlet **510** into an air compressor **520**. The air compressor **520** elevates the air entering through the air inlet **510** and directs the compressed air to the air separation plant **530**. Various different air separation techniques can be utilized by the air separation plant **530** so that enriched nitrogen gases exit the air separation plant **530** through an enriched nitrogen gas outlet **532** and enriched oxygen gases exit the air separation plant **530** through an enriched oxygen gases outlet **534**. The enriched nitrogen gases outlet **532** typically returns back into the surrounding environment. The enriched oxygen gases outlet **534** leads to the combustion device **550**.

In the combustion device **550**, the enriched oxygen gases from the air separation plant **530** are combined with the hydrogen containing fuel from a fuel supply **540** and combustion is initiated within the combustion device **550**. A water or carbon dioxide diluent is added into the combustion device to decrease a temperature of the products of combustion within the combustion device **550** and to increase a mass flow rate for a steam or steam and carbon dioxide working fluid exiting the combustion device **550**.

This working fluid is then directed into an expander **560**, such as a turbine. The turbine is coupled through a power transfer coupling **562** to the air compressor **520** to drive the air compressor **520**. FIG. **12** shows a rotating shaft as one type of mechanical power transfer coupling **562**. Another way to power the air compressor **520** is to generate electricity by means of the power absorber **570** and use part of the generated electricity to drive an electric motor which in turn powers the air compressor **520**. The expander **560** also is coupled through a power transfer coupling **564** to a power absorber **570** such as an electric generator or a power transmission for a vehicle. The expander **560** is also coupled through a power transfer coupling **566** to the air separation plant **530** to drive machinery within the air separation plant **530**.

The working fluid is then discharged from the expander **560** through a discharge **572**. The discharge **572** leads to a condenser **580**. The condenser has coolant passing through a coolant flow path **592** which causes water portions of the working fluid entering the condenser **580** to be condensed. A water and carbon dioxide outlet **590** is provided for excess water or water and carbon dioxide mixture from the condenser. A water or water and carbon dioxide diluent path is also provided out of the condenser **580** for returning water or water and carbon dioxide diluent back to the combustion device **550**.

As should be readily apparent, the air compressor **520** is generally analogous to the turbocompressor **10** of the first embodiment. The air separation plant **530** is generally analogous to the rectifier **60** of the first embodiment. The fuel supply **540** is generally analogous to the fuel supply tank **37** of the first embodiment. The combustion device **550** is generally analogous to the gas generator **70** of the first embodiment. The expander **560** is generally analogous to the reciprocating cylinders **44**, **46** of the reciprocating engine **20** of the first embodiment. The power absorber **570** is generally analogous to the power transmission **30** of the first embodiment and the condenser **580** is generally analogous to the condenser **80** of the first embodiment. Hence, the basic low-polluting engine schematic of FIG. **12** represented by

reference numeral **500** merely provides an overall depiction of the power production cycle of this invention. While a specific analogy has been drawn between this basic low-polluting engine **500** and the first embodiment, shown in FIG. **1**, similar analogies can be drawn to the other embodiments of this invention.

With particular reference to FIG. **13**, details of a basic low-polluting engine **600** featuring regeneration is provided. The low-polluting engine featuring regeneration **600** depicted in FIG. **13** is identical to the basic low-polluting engine **500** of FIG. **12** except that handling of the working fluid upon discharge from the expander **660** has been altered to feature regeneration. Specifically, the low-polluting engine featuring regeneration **600** includes an air inlet **610**, air compressor **620**, air separation plant **630**, fuel supply **640**, combustion device **650**, expander **660** and power absorber **670** arranged similarly to the components **510**, **520**, **530**, **540**, **550**, **560**, **570** of the basic low-polluting engine **500** shown in FIG. **12**.

In contrast, the low-polluting engine featuring regeneration **600** directs the working fluid through a discharge **672** which leads to a regenerator **674**. The working fluid exits the regenerator **674** through a regenerator outlet **676**. The regenerator outlet **676** leads to a condenser **680**. Within the condenser **680**, the working fluid is cooled by action of a coolant flowing along a coolant flow path **682** to be separated into carbon dioxide and water. The carbon dioxide exits the condenser **680** through a carbon dioxide outlet **684** and the water exits the condenser **680** through the water outlet **686**. The water outlet **686** leads to a feed water pump **688**. Excess water is discharged from the engine **600** at a water excess outlet **690**. Other portions of the water are directed along a regenerator water flow path **692** through the regenerator **674** where the water is preheated. The water or steam leaves the regenerator **674** along a water diluent path **694** leading back to the combustion device **650**.

The carbon dioxide outlet **684** from the condenser **680** also leads into the regenerator **674** for preheating of the carbon dioxide. The carbon dioxide leaves the regenerator along a regenerator carbon dioxide flow **696** which leads to a carbon dioxide compressor **697**. The carbon dioxide compressor **697** in turn leads to a carbon dioxide excess outlet **698** where excess carbon dioxide is removed from the engine **600**. If desired, a portion of the carbon dioxide can be directed along a carbon dioxide diluent path **699** back to the combustion device **650** for use as a diluent within the combustion device **650**.

With particular reference to FIG. **14**, a basic low-polluting engine **700** with bottoming cycle is provided. As with the low-polluting engine featuring regeneration **600** of FIG. **13**, portions of the low-polluting engine featuring a bottoming cycle **700** are similar to the basic low-polluting engine **500** of FIG. **12** up until discharge of the working fluid from the expander **560**. Hence, the low polluting engine featuring a bottoming cycle **700** includes an air inlet **710**, air compressor **720**, air separation plant **730**, fuel supply **740**, combustion device **750**, expander **760** and power absorber **770** having corresponding components in the engine **500** of FIG. **12**.

The working fluid is discharged from the expander **760** through a discharge **772** leading to a Heat Recovery Steam Generator (HRSG)/condenser **774**. The working fluid is condensed and a water outlet **775** directs water from the condenser **774** and a carbon dioxide outlet **776** directs carbon dioxide from the condenser **774**. The carbon dioxide outlet **776** leads to a carbon dioxide compressor **777**, a carbon dioxide excess outlet **778** and carbon dioxide diluent path **779** leading back to the combustion device **750**.

The water outlet **775** leads to a feed water pump **780** which in turn leads to a water excess outlet **781** and a water regeneration path **782** where the water is regenerated within a bottoming regenerator **787**. The water exits the bottoming regenerator **787** along a water diluent path **783** leading back to the combustion device **750**.

The HRSG/condenser **774** and regenerator **787** are driven by a bottoming cycle including a bottoming cycle boiler **784** which boils water in the bottoming cycle from the discharge working fluid from the discharge **772** and entering the HRSG/condenser **774**. The topping cycle also includes a bottoming turbine **786** and a bottoming regenerator **787** which cools steam exiting the steam turbine **786** and heats water entering the water diluent path **783**. The bottoming cycle also includes a bottoming condenser **788** cooled by a coolant within a coolant line **789**. Hence, the working fluid such as water within the bottoming cycle passes from the condenser **788** to the boiler **784** where the working fluid is heated and turned into a gas. Note that the HRSG/condenser **774** and boiler **784** are integrated together but that only heat exchange is allowed, not mixing. The bottoming cycle working fluid then passes through the turbine **786** for production of power which can be directed to the power absorber **770** or other components of the low-polluting engine featuring a bottoming cycle **700**. The working fluid then exits the turbine **786** and is cooled in the regenerator **787** before returning to the condenser **788**.

The air separation plants **530**, **630**, **730** of FIGS. **12–14** can be any of a variety of different apparatuses or systems which are capable of removing at least a portion of the nitrogen from air. For instance, and specifically discussed above with respect to the first through eighth embodiments of FIGS. **1–11**, the air separation plant **530**, **630**, **730** can include a rectifier such as the rectifier **60** of FIG. **1** or other liquefaction equipment which separate nitrogen from the air by liquefaction.

However, liquefaction processes are not the only processes that can remove at least a portion of nitrogen from air. Several other processes are available to achieve this goal. These processes, which are described in detail below, can be substituted for the cryogenic liquefaction process described in detail hereinabove. One alternative technique available for use in the air separation plant **530**, **630**, **730** is a pressure swing adsorption plant **800** (FIG. **15**). The pressure swing adsorption process, also called vacuum pressure swing adsorption, uses materials which are capable of adsorption and desorption of oxygen or nitrogen such as, for example, synthetic zeolites. The vacuum pressure swing adsorption process can be used to separate oxygen and nitrogen from air.

The process typically employs two beds that go through swings in pressure from above atmospheric to below atmospheric pressure. Each bed cycles sequentially from adsorption to desorption and regeneration and back to adsorption. The two beds operate in a staggered arrangement in which one bed is adsorbing while the other bed is regenerating. Thus the beds alternately produce a gaseous product of high oxygen content. With this process, a gaseous mixture can be produced with a wide range of oxygen purities. As an example, oxygen purities ranging from 90% to 94% are used in many industrial applications and can be successfully produced with commercially available vacuum pressure swing adsorption processes such as those produced by Praxair, Inc. with world headquarters located at 39 Old Ridgebury Road, Danbury, Conn. 06810-5113.

With particular reference to FIG. **15**, a layout of a typical pressure swing adsorption plant **800** is shown. Initially, the air inlet **510** and feed compressor **520** are provided analogous to the air inlet **510** and air compressor **520** of the basic low-polluting engine schematic **500** shown in FIG. **12**. Preferably, a filter **515** is interposed between the air inlet and the feed compressor to filter particulates out of the air inlet stream. The compressed air discharged from the feed compressor **520** is directed to a first inlet line **810** passing through a first inlet line valve **815** and into a first enclosure **820**.

The first enclosure **820** is provided with an appropriate material capable of adsorption and desorption of oxygen or nitrogen. One material that is used in these applications is zeolite. Two outlets are provided from the first enclosure **820** including a first oxygen outlet **830** coupled to the first enclosure **820** through a first valve **832** and a first nitrogen outlet **835** coupled to the first enclosure **820** through a first nitrogen valve **836**. The first nitrogen outlet **835** leads to a nitrogen compressor **837** which raises the gases in the first nitrogen outlet **835** back to atmospheric pressure for discharge through nitrogen discharge **839**. In fact, the first nitrogen outlet **835** and first oxygen outlet **830** do not contain pure oxygen or nitrogen but rather merely gases which are enriched in content with oxygen or nitrogen.

The first oxygen outlet **830** leads to a surge tank **870** with a valve **875** beyond the surge tank **870** and leading to an oxygen supply line **880**. In parallel with the first enclosure **820**, a second enclosure **850** is provided. The second enclosure **850** is similarly loaded with an appropriate material capable of adsorption and desorption of oxygen or nitrogen. A second inlet line **840** leads from the feed compressor **520** through a second inlet line valve **845** and into the second enclosure **850**. A second oxygen outlet **860** leads out of the second enclosure **850** and on to the surge tank **870** through a second oxygen outlet valve **862**. A second nitrogen outlet **865** also leads out of the second enclosure **850** through a second nitrogen outlet valve **866** and on to the compressor **837**. A cycle controller **890** controls the opening and closing of the various valves **815**, **832**, **836**, **845**, **862**, **866** and **875**.

One typical operation sequence of the pressure swing adsorption plant **800** is as follows. Initially, all of the valves are closed except for the first nitrogen valve **836** and the nitrogen compressor **837** is used to reduce pressure in the first enclosure **820** to below atmospheric pressure. The first nitrogen valve **836** is then closed. Next, the first inlet valve **815** is opened. With the first inlet line valve **815** open and all other valves closed, the feed compressor directs air into the first enclosure **820**.

As pressure builds up within the first enclosure **820**, the material within the first enclosure **820** is caused to adsorb different molecules within the air in a discriminate fashion. For instance, the material can be selected to adsorb nitrogen at elevated pressure. At reduced pressure, the adsorption effect reverses to desorption.

In essence, if the material adsorbs nitrogen at pressures elevated above atmospheric pressure and desorbs nitrogen at pressures below atmospheric pressure, the various valves **815**, **832**, **836** and **875** are sequentially operated so that the first enclosure **820** has an elevated pressure and adsorbs nitrogen before the remaining enriched oxygen air is allowed to freely flow out of the first enclosure **820** along the first oxygen outlet **830**. When the oxygen enclosure **820** has a pressure below atmospheric pressure, the material within the first enclosure **820** is desorbing the nitrogen while the first nitrogen outlet valve **836** is open. In this way, when nitrogen is being adsorbed, the remaining air within the first enclosure **820** is enriched in oxygen and is directed to the first oxygen outlet **830** and when the material within the enclosure **820** is desorbing the nitrogen, the nitrogen enriched gases within the first enclosure **820** are allowed to flow into the first nitrogen outlet **835** and to the nitrogen discharge **839**.

The zeolite material within the enclosure **820** benefits from some residence time to adsorb as much nitrogen (or oxygen) as desired. During this time no oxygen rich or nitrogen rich gases flow to the oxygen supply line **880** or the nitrogen discharge **839**. Hence, it is beneficial to use a second enclosure **850** similar to the first enclosure **820** while the valves **815**, **832** and **836** are all closed and the zeolite material in the first enclosure **820** is adsorbing nitrogen (or oxygen).

Specifically the valves **845**, **862** and **866** are sequentially opened and closed to cause the second enclosure **850** to operate in a manner similar to that outlined with reference to the first enclosure **820** above. When the material within the second enclosure **850** is adsorbing nitrogen (or oxygen) the process is reversed so that the first enclosure **820**, having had its zeolite material appropriately desorbed, is brought back on line for repetition of the alternating pattern of use between the first enclosure **820** and the second enclosure **850**. As should be apparent, additional enclosures besides the first enclosure **820** and second enclosure **850** could be utilized if the adsorbing material requires more residence time or to increase the overall throughput of oxygen enriched gases from the air. Over time, the material within the first enclosure **820** which adsorbs and desorbs the oxygen or nitrogen tends to lose its effectiveness. The material can be regenerated, if it is in the form of a synthetic zeolite, by application of heat or other regeneration means. Accordingly, when the material within the first enclosure **820** begins to lose its effectiveness, such a heat treatment can be performed or the zeolite material replaced. Should the adsorbing material be configured to adsorb and desorb oxygen rather than nitrogen, the above described operation of the pressure swing adsorption plant **800** would be adjusted to provide the desired separation of oxygen from nitrogen.

With particular reference to FIG. **16**, details of an alternative apparatus and system for use within the air separation plants **530**, **630**, **730** is provided. In such membrane-based air separation systems **900** the separation of air into its components is achieved by passing an air feed stream under pressure over a membrane. The pressure gradient across the membrane causes the most permeable component to pass through the membrane more rapidly than other components, thereby creating a product stream that is enriched in this component while the feed stream is depleted in this component.

The transport of the air through a membrane can follow several physical processes. As an example, these processes could be: 1) Knudsen flow separation which is based on molecular weight differences between the gases; 2) Ultramicroporous molecular sieving separation; and 3) Solution-diffusion separation which is based both on solubility and mobility factors. In the case of a solution-diffusion process the air first dissolves in a polymer, then diffuses through its thickness and then evaporates from the other side into the product stream.

Several types of membranes are available for this process, each having specific advantages in particular situations. For example, cellulose acetate membranes exhibit good separa-

tion factors for oxygen and nitrogen, but have low flux rates. Thin film composite membranes placed over microporous polysulfone exhibits lower separation factors than cellulose acetate, but have a higher flux at the same pressure differential. Repeating the process in a series configuration can increase the oxygen concentration in the product stream. For example, one industrial membrane, in two passes, may enrich the oxygen content of air to about 50%.

The above described membrane processes operate at a temperature that is near ambient temperature. A higher-than-ambient temperature may arise as a result of a possible temperature rise resulting from pressurization of the air feed stream to create a pressure difference across the membrane.

Still another membrane separation process uses an electroceramic membrane. Electroceramics are ionic solid solutions that permit movement of ions. To become appreciably mobile, the oxide ion, because of its size and charge, requires a high temperature (about 800° F.) to overcome the solid oxide lattice energy. The electroceramic membrane process integrates well with the production of power described in this invention because the power generating process produces waste heat that can be used to generate the required operating temperature of the membrane. For instance, and with reference to FIG. **12**, the expander **560** and gas generator **550** can be configured such that the working fluid exiting the expander **560** at the discharge **572** has a temperature at or above 800° F. The working fluid can then be routed to a heat exchanger which heats the electroceramic membranes to 800° F. for use in the air development system **530**.

The oxygen ions move through the lattice because of a gradient in pressure across the membrane. On the high oxygen partial pressure side of the membrane, oxygen is reduced when it receives four electrons and occupies two vacancies. At the low oxygen partial pressure side, vacancies are created by the reverse reaction. Oxide ions at the low partial pressure side can be removed by liberation of oxygen. The rate of diffusion through the membrane is determined by ion mobility. This mobility is a characteristic of a particular material, and is dependent on the size, charge and geometry of the cations in the lattice. A possible material for formation of the electroceramic membrane is yttria stabilized zirconia.

With particular reference to FIG. **16**, one arrangement for the membrane based air separation system for use in the air separation plants **530**, **630**, **730** is depicted by reference numeral **900**. In this embodiment for the air separation plant, an air inlet **510** and feed compressor **520** are provided similar to the air inlet **510** and feed compressor **520** disclosed in FIG. **12** with regard to the basic low-polluting engine **500**. The compressed air is then directed to a junction **910** where return flows from various membrane chambers return for reprocessing and are combined together within the junction **910**. A junction outlet **915** provides the only outlet from the junction **910**. The junction outlet **915** leads to a first membrane enclosure **920**.

The first membrane enclosure **920** is preferably an enclosure which has an inlet and a membrane dividing the enclosure into two regions. Two outlets are provided in the enclosure. One of the outlets is on the same side of the membrane as the inlet and the other outlet is located on a side of the membrane opposite the inlet. If the membrane is of a type which allows oxygen to pass more readily there through than nitrogen, an oxygen rich outlet **924** is located on the downstream side of the membrane and a nitrogen rich outlet **926** is located on a same side of the membrane as the inlet **915**. If the membrane allows nitrogen to pass more readily there through, the arrangement of the outlets is reversed.

The junction outlet **915** passes into the first membrane enclosure **920** through the inlet in the first membrane enclosure **920**. Because oxygen flows more readily through the membrane within the first membrane enclosure **920**, gases flowing through the oxygen rich outlet **924** have an increased percentage of oxygen with respect to standard atmospheric oxygen percentages and the nitrogen rich outlet **926** has a nitrogen content which is greater than that of standard atmospheric conditions.

The oxygen rich outlet **924** leads to a second membrane enclosure **930** where it enters the second membrane enclosure **930** through an oxygen rich inlet **932**. The second membrane enclosure **930** is arranged similarly to the first membrane enclosure **920**. Hence, a membrane is provided within the second membrane enclosure **930** and two outlets are provided including an oxygen super rich outlet **934** on a side of the membrane opposite the oxygen rich inlet **932** and a second outlet **938** located on a common side of the membrane within the second membrane enclosure **930** as the oxygen rich inlet **932**.

The oxygen super rich outlet **934** leads to an oxygen supply **936** for use within one of the engines **500**, **600**, **700** discussed above. The gases flowing through the second outlet **938** typically have oxygen and nitrogen contents matching that of standard atmospheric conditions but maintaining an elevated pressure. The second outlet **938** returns back to the junction **910** for combining with air exiting the feed compressor **520** and for repassing through the first membrane enclosure **920** as discussed above.

The nitrogen rich outlet **926** exiting the first membrane enclosure **920** is passed to a third membrane enclosure **940** where it enters the third membrane enclosure **940** through a nitrogen rich inlet **942**. The third membrane enclosure **940** is similarly arranged to the first membrane enclosure **920** and second membrane enclosure **930** such that a membrane is located within the third membrane enclosure **940** and two outlets are provided from the third membrane enclosure **940**. One of the outlets is a nitrogen super rich outlet **944** on a side of the membrane within the third membrane enclosure **940** similar to that of the nitrogen rich inlet **942**. The nitrogen super rich outlet **944** can lead to a surrounding atmosphere or be used for processes where a high nitrogen content gas is desirable.

A third permeate return **948** provides an outlet from the third membrane enclosure **940** which is on a side of the membrane within the third membrane enclosure **940** opposite the location of the nitrogen rich inlet **942**. The third permeate return **948** leads back to the junction **910** for reprocessing of the still pressurized air exiting the third membrane enclosure **940** through the third permeate return **948**. This air passing through the third permeate return **948** is typically similar in content to the second permeate return **938** and the air exiting the feed compressor **520**.

While many different types of membranes can be utilized within the first membrane enclosure **920**, second membrane enclosure **930** and third membrane enclosure **940**, the type of membrane would typically not alter the general arrangement of the membrane enclosures **920**, **930**, **940** and conduits for directing gases between the various permeates **920**, **930**, **940** and other components of the membrane based air separation plant **900** of FIG. **16**.

While various different techniques have been disclosed for separation of nitrogen and oxygen from air, this description is not provided to identify every possible air separation process or apparatus. For example, economic and other consideration may make application of combinations of the

above described processes advantageous. Rather, these examples are presented to indicate that several separation processes are available to accomplish the goal of enriching the oxygen content of air supplied to a combustion device and decreasing a corresponding nitrogen content of the air supply to a combustion device. By reducing an amount of nitrogen passing into a combustion device such as these combustion devices **550**, **650**, **750**, an amount of nitrogen oxides produced as products of combustion within the combustion device **550**, **650**, **750** is reduced and low-pollution combustion based power production results.

Moreover, having thus described the invention it should now be apparent that various different modifications could be resorted to without departing from the scope of the invention as disclosed herein and as identified in the included claims. The above description is provided to disclose the best mode for practicing this invention and to enable one skilled in the art to practice this invention but should not be construed to limit the scope of the invention disclosed herein.

What is claimed is:

**1**. A low or no pollution emitting combustion engine to provide power for various applications such as vehicle propulsion or stationary electric power generation, the engine comprising in combination:

an air inlet;

a source of fuel at least partially including hydrogen;

an air separator including an inlet coupled to said air inlet, said air separator configured to remove nitrogen from the air entering said air inlet so that remaining air is primarily oxygen and with other non-oxygen constituents, and an oxygen enriched air outlet;

a fuel combustor, said fuel combustor receiving fuel from said source of fuel and oxygen from said oxygen enriched air outlet of said air separator, said combustor combusting said fuel with said oxygen to produce elevated pressure and elevated temperature combustion products including steam, said combustor having a discharge for said combustion products;

wherein at least part of a non-steam portion of the combustion products is removed from the combustion products after discharge from said combustor, so that the combustion products have more steam than the combustion products at said discharge; and

a return line for routing at least a portion of the steam rich combustion products back to said combustor.

**2**. The engine of claim **1** wherein said air separator includes means to liquefy at least a portion of the air and means to separate liquid portions of the air from non-liquid portions of the air and means to direct portions of the air which have a greater oxygen content to said oxygen rich outlet.

**3**. The engine of claim **1** wherein at least one compressor is oriented between said air inlet and said air separator, raising a pressure of the air;

wherein at least one intercooler is oriented between a first said compressor and said air separator, said at least one intercooler reducing a temperature of the air passing there through; and

wherein said air separator includes an expander downstream from said at least one intercooler, said expander reducing a pressure of the air and a temperature of the air to below a condensation point of the oxygen within the air, said air separator including said oxygen enriched air outlet.

**4**. The engine of claim **1** wherein said air separator includes a material capable of adsorption and desorption of an air constituent gas, said material located in contact with air from said air inlet.

**5**. The engine of claim **4** wherein said material adsorbs nitrogen and desorbs nitrogen based on pressure of the air adjacent the material, wherein at least two separate beds of material are provided with means to sequentially increase and decrease pressure adjacent said beds of material to be above atmospheric pressure and below atmospheric pressure, said beds including means to selectively discharge air enriched with oxygen out of said beds and to said oxygen enriched air outlet.

**6**. The engine of claim **1** wherein said air separator includes at least one membrane, said membrane having a different permeability for oxygen than for nitrogen, said air separator directing air adjacent one side of said membrane and collecting oxygen rich gases and nitrogen rich gases from opposite sides of said membrane, the oxygen rich gases directed to said oxygen enriched air outlet of said air separator.

**7**. The engine of claim **6** wherein two or more membranes are arranged such that air flow through said membranes occurs in series and greater oxygen enrichment and nitrogen enrichment are achieved.

**8**. The engine of claim **7** wherein a feed compressor is coupled to said air inlet including means to increase pressure of air entering said air separator to above atmospheric pressure, said membrane being more permeable to oxygen than to nitrogen, said membrane juxtaposed between an outlet of said feed compressor and said oxygen rich outlet, and a second membrane juxtaposed between said oxygen rich outlet and an oxygen super rich outlet, such that gases on a side of said second membrane opposite said oxygen rich outlet have a greater percentage of oxygen than on said oxygen rich outlet side of said second membrane, said oxygen super rich outlet leading to said oxygen enriched air outlet of said air separator.

**9**. The engine of claim **1** wherein said air separator includes an electroceramic membrane juxtaposed between said air inlet and said oxygen enriched outlet, said electroceramic membrane including an ionic solid solution which permits movement of oxygen ions there through.

**10**. The engine of claim **1** wherein a combustion product expander is coupled to said discharge of said combustor, said expander configured to output power from said engine and an exhaust for the combustion products, wherein said exhaust is coupled to a means to return at least a portion of the combustion products back to said combustion device, such that said engine operates as an at least partially closed cycle.

**11**. The engine of claim **10** wherein said means to return the combustion products back to said combustion device includes means to cool the combustion products while exchanging heat with a separate working fluid upstream from a turbine in a separate closed Rankine cycle engine.

**12**. The engine of claim **1** wherein a combustion products expander is coupled to said discharge of said combustor, said expander outputting power from said engine and having an exhaust for the combustion products.

**13**. The engine of claim **12** wherein a reheater is located downstream of said combustion product expander, said reheater enhancing a temperature of said combustion products exiting said combustion product expander.

**14**. A low or no pollution emitting combustion engine to provide power for various applications such as vehicle propulsion, the engine comprising in combination:

an air inlet configured to receive air from an environment surrounding said engine;

a source of fuel at least partially including hydrogen;

an air separator including an inlet coupled to said air inlet, said air separator configured to remove nitrogen from the air entering said air inlet so that remaining air is primarily oxygen and with other non-oxygen constituents, and an oxygen enriched air outlet;

a fuel combustor, said fuel combustor receiving fuel from said source of fuel and oxygen from said oxygen enriched air outlet of said air separator, said combustor combusting the fuel with the oxygen to produce elevated pressure and elevated temperature combustion products including steam, the combustor having a discharge for the combustion products;

a combustion products expander downstream from said discharge of said combustor, said expander outputting power from said engine and having an exhaust for the combustion products; and

a reheater is located downstream of said combustion product expander, said reheater enhancing a temperature of said combustion products exiting said combustion product expander.

**15**. The engine of claim **14** wherein said engine includes a means to compress the oxygen and the fuel before the oxygen and the fuel enter said combustion device.

**16**. The engine of claim **15** wherein said means to compress the oxygen includes at least two compressors, each said compressor including an intercooler there between, at least two of said compressors oriented between said air inlet and said air treatment device, such that the oxygen is compressed along with other constituents of the air entering the air inlet.

**17**. The engine of claim **14** wherein said combustion device includes a water inlet, said water inlet configured to receive water from at least one source which includes water originally created as one of said combustion products exiting said combustion chamber, said water inlet placing water into contact with said combustion products for mixing with said combustion products and output through said discharge of said combustion device, whereby a temperature of gases exiting said combustion device through said discharge is decreased and a mass flow rate of gases exiting said combustion device through said discharge is increased.

**18**. The engine of claim **17** wherein at least a portion of said combustion products exiting said exhaust of said combustion product expansion device are routed to a condenser where the steam within said combustion products is condensed to water, said condenser including a return duct to said water inlet of said combustion device, whereby the steam/water acts as a working fluid for a Rankine cycle.

**19**. The engine of claim **14** wherein a bypass air duct is provided between said air inlet and said combustion device, said bypass air duct delivering air, including nitrogen, to said combustion device, said bypass air duct including a valve capable of blocking said bypass air duct, whereby air, including nitrogen, can be provided to the combustion device when desired.

**20**. The engine of claim **15** wherein each of said means to compress is coupled to an electric motor and battery such that said electric motor and battery can drive said means to compress for compression of the oxygen, and wherein said means to compress is also coupled to at least one expander in fluid communication with said combustion products exiting said discharge of said combustion device, such that said expanders can drive said means to compress for compression of the oxygen; and

wherein said electric motors include means to charge said battery when said expanders deliver excess power beyond that necessary to drive said means to compress for compression of the oxygen.

**21**. The engine of claim **14** wherein at least one compressor is oriented between said air inlet and said air separator, raising a pressure of the air;

wherein at least one intercooler is oriented between a first said compressor and said air separator, each said intercooler reducing a temperature of the air passing there through; and

wherein said air separator includes an expander downstream from a last said intercooler, said expander reducing a pressure of the air and a temperature of the air to below a condensation point of the oxygen within the air, said air separator including said oxygen enriched air outlet substantially free of nitrogen.

**22**. The engine of claim **21** wherein said air separator includes a nitrogen outlet, and wherein said engine includes a heat transfer device including means to transfer heat between nitrogen exiting said air separator through said nitrogen outlet and air between said expander and said air inlet.

**23**. The engine of claim **21** wherein said expander is coupled to an oxygen compressor interposed between said oxygen enriched air outlet of said air separator and said combustion device, whereby a pressure of the oxygen is increased.

**24**. The engine of claim **21** wherein a scrubber is provided between said air separator and said air inlet to remove gases capable of freezing from the air.

**25**. The engine of claim **22** wherein said air separator includes a two column rectifier downstream from said expander, said rectifier including said oxygen enriched air outlet and said nitrogen outlet.

**26**. The engine of claim **20** wherein at least one of said compressors is oriented between said air inlet and said air separator, raising a pressure of the air;

wherein at least one intercooler is oriented between a first said compressor and said air separator, each said intercooler reducing a temperature of the air passing there through;

wherein said air separator includes an expander downstream from a last said intercooler, said expander reducing a pressure of the air and a temperature of the air to below a condensation point of the oxygen within the air, said air separator including said oxygen enriched air outlet substantially free of nitrogen;

wherein said air separator includes a nitrogen outlet, and wherein said engine includes a heat transfer device including means to transfer heat between nitrogen exiting said air separator through said nitrogen outlet and air between said expander and said air inlet;

wherein said expander is coupled to an oxygen compressor interposed between said oxygen outlet of said air separator and said combustion device, whereby a pressure of the oxygen is increased;

wherein a scrubber is provided between said air separator and said air inlet to remove gases capable of freezing from the air; and

wherein said air separator includes a two column rectifier downstream from said expander, said rectifier including said oxygen enriched air outlet and said nitrogen outlet.

**27**. The engine of claim **14** wherein said fuel is a hydrocarbon fuel including hydrogen, carbon and possibly oxygen.

**28**. The engine of claim **27** wherein said fuel and said oxygen are provided at a stoichiometric ratio needed to

produce said combustion products including substantially only steam and carbon dioxide.

**29**. The engine of claim **14** wherein at least a portion of said combustion products exiting said exhaust of said combustion product expansion device are routed to a condenser where the steam within said combustion products is condensed to water, said condenser including a first return duct to said water inlet of said combustion device, whereby the steam/water acts as a working fluid for a Rankine cycle;

wherein said condenser includes a heat transfer fluid therein for removal of heat from the steam, said heat transfer fluid in fluid communication with an interior of a radiator oriented in the environment surrounding said engine with air from the surrounding environment passing against an exterior of said radiator and cooling said heat transfer fluid therein; and

wherein said condenser includes a second outlet water duct spraying water into the surrounding environment and against said exterior of said radiator for evaporative cooling of said heat transfer fluid within said radiator.

**30**. The engine of claim **14** wherein said reheater receives the combustion products therein, a fuel therein and oxygen therein, and combusts the fuel with the oxygen to enhance a temperature of the combustion products therein.

**31**. The engine of claim **30** wherein the combustion products are mixed with reheater products of combustion of the fuel with the oxygen.

**32**. The engine of claim **30** wherein at least a portion of the fuel received by the reheater is from said source of fuel.

**33**. The engine of claim **30** wherein at least a portion of the oxygen received by the reheater is from said oxygen enriched air outlet of said air separator.

**34**. The engine of claim **30** wherein a second expander is located downstream from said reheater and expands a fluid including the combustion products received by said reheater and the reheater products of combustion.

**35**. A combustion engine providing clean power for various applications and featuring low $NO_x$ production, comprising in combination:

a source of air, the air including nitrogen and oxygen;

a source of fuel, the fuel including hydrogen;

means to remove at least a portion of the nitrogen from the air entering said inlet so that the air exiting through an oxygen enriched air outlet is oxygen enriched;

a fuel combustor, said fuel combustor receiving fuel from said source of fuel and air from said oxygen enriched air outlet, said combustor combusting the fuel with the air to produce elevated pressure and elevated temperature combustion products including steam, the combustor having a discharge for the combustion products;

a combustion products expander coupled to said discharge of said combustor, said combustion products expander outputting power from said engine;

means to remove at least part of a non-steam portion of the combustion products from the combustion products after discharge from said combustor, so that the combustion products have more steam than the combustion products at said discharge; and

means to return at least a portion of the steam rich combustion products back to said combustor.

**36**. The engine of claim **35** wherein a reheater is located downstream of said combustion product expander, said reheater enhancing a temperature of said combustion products exiting said combustion product expander.

**37**. The engine of claim **36** wherein a second combustion product expander is located downstream of said reheater.

* * * * *