US006041978A

United States Patent [19]

Hagele

[11] Patent Number: 6,041,978

[45] Date of Patent: Mar. 28, 2000

[54] **LIQUID DROPPER FOR UPRIGHT EYE DROP INSTILLATION**

[76] Inventor: **James Hagele**, 13262 Evergreen Dr., Nevada City, Calif. 95959

[21] Appl. No.: **09/183,927**

[22] Filed: **Oct. 30, 1998**

[51] **Int. Cl.**[7] **B65D 47/18**

[52] **U.S. Cl.** **222/420**; 222/211; 604/294; 604/295; 604/296

[58] **Field of Search** 222/211, 420; 604/294, 295, 296, 297, 298, 299, 301, 302

[56] **References Cited**

U.S. PATENT DOCUMENTS

2,728,491	12/1955	Aneshansley	222/211 X
2,783,919	3/1957	Ansell	222/211
3,756,478	9/1973	Podell et al.	222/211 X

FOREIGN PATENT DOCUMENTS

453235	12/1948	Canada	222/211

Primary Examiner—Kevin Shaver

Assistant Examiner—Thach Bui

Attorney, Agent, or Firm—Heisler & Associates

[57] **ABSTRACT**

A dropper **10** is provided which allows a person to precisely instill eye drop solution while the person's head and the dropper **10** are oriented in an upright position. The dropper **10** includes a deformable, resilient reservoir **40** of medicinal fluid which may be squeezed to to cause the fluid to flow up a supply conduit **15** to a housing **20** of the dropper **10**. The fluid then flows out an opening **32** in a tip **31** of the dropper **10**. An inner rod **130** or inner delivery tube **30** extends along an interior of the supply conduit **15**. The tube **30** or rod **130** discourages air bubbles from being entrapped within the conduit **15**. The tip **31** extends forward from a center line **41** along an extension **27** which is substantially perpendicular to a collar **50** extending up from the reservoir **40**.

9 Claims, 4 Drawing Sheets

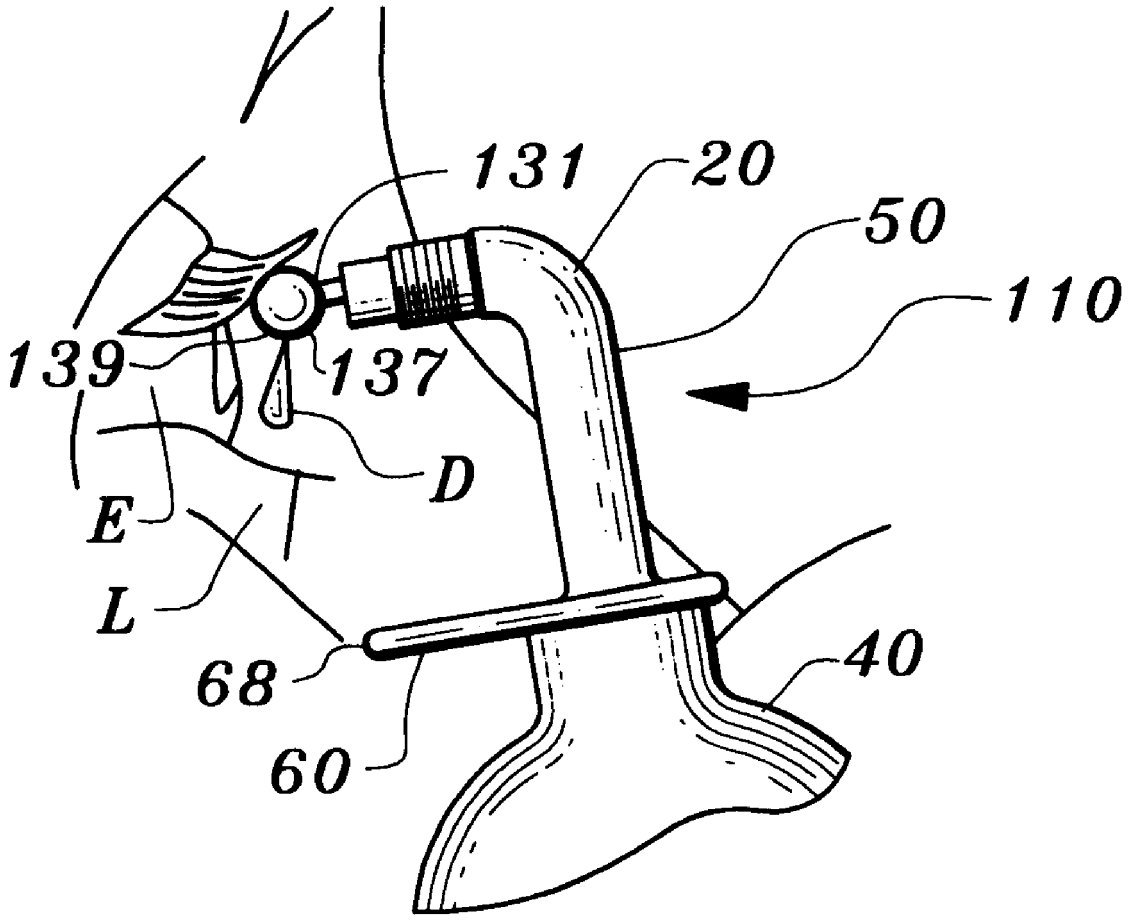

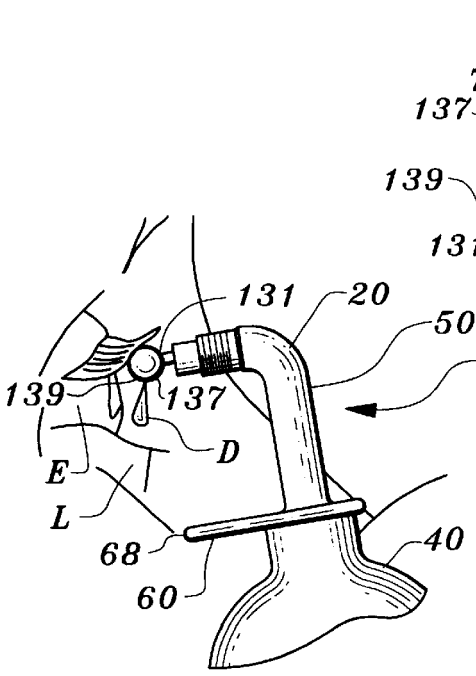
131
20
50
110
139
137
D
E
L
68
60
40

Fig. 1

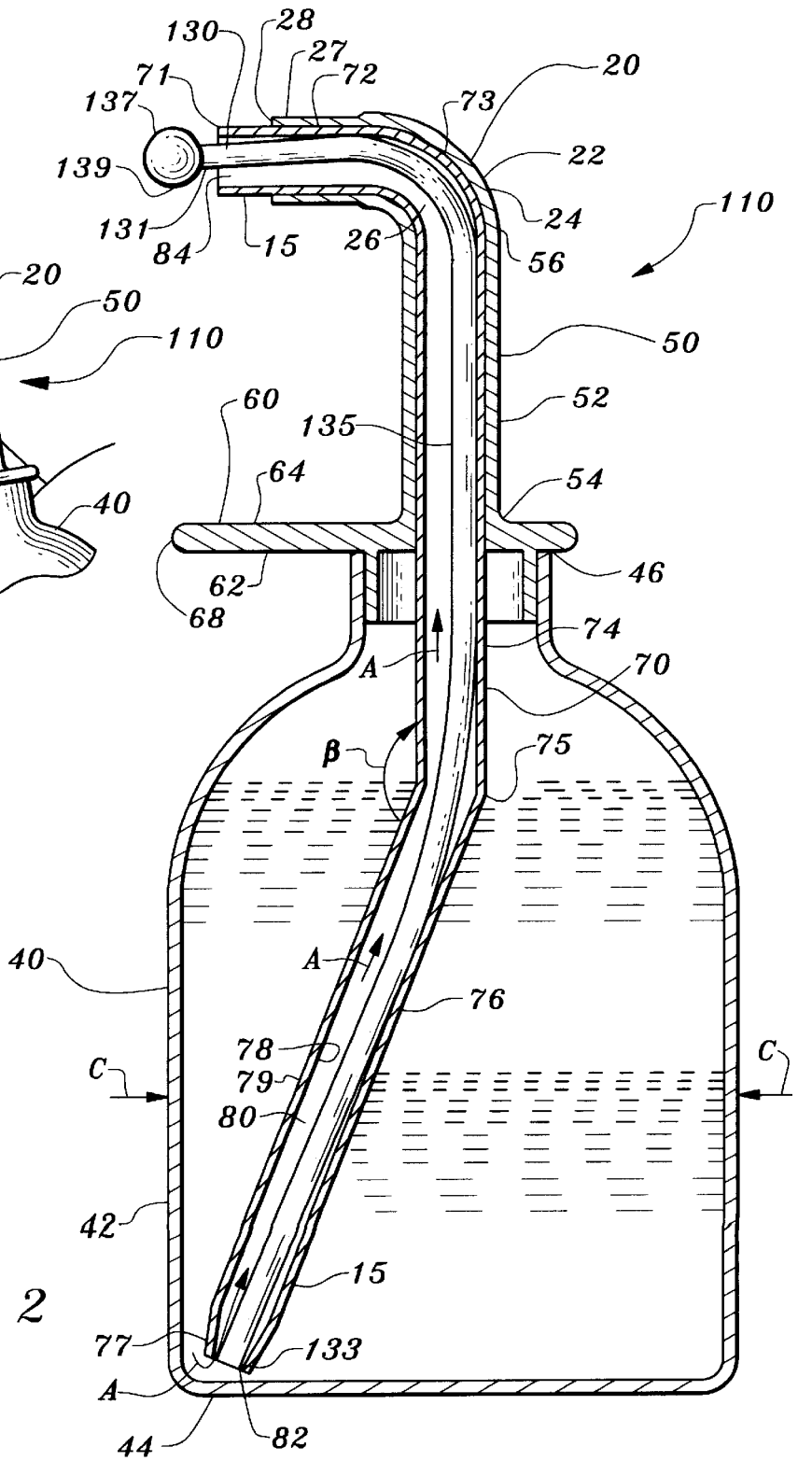
130
28
27
72
71
137
73
20
139
22
131
84
15
26
24
56
110
50
52
60
135
64
54
62
68
46
74
A
70
β
75
40
A
76
78
79
80
C
C
42
15
77
133
A
44
82

Fig. 2

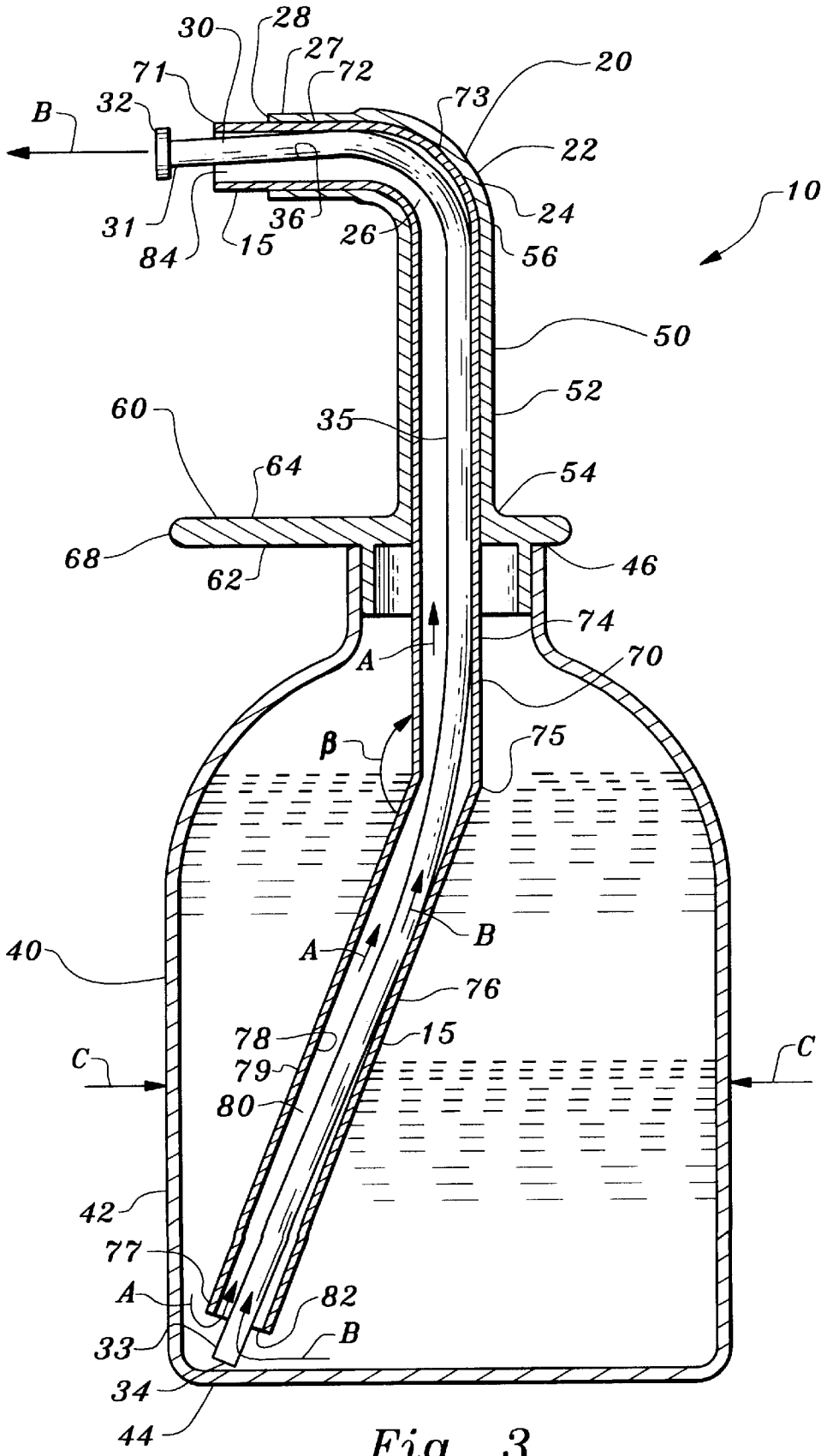
30
28
27
72
71
20
73
B
32
22
10
24
31
36
26
84
15
56
50
52
60
35
64
54
68
46
62
74
A
70
β
75
B
40
A
76
78
15
C
79
C
80
42
77
A
82
33
B
34
44

Fig. 3

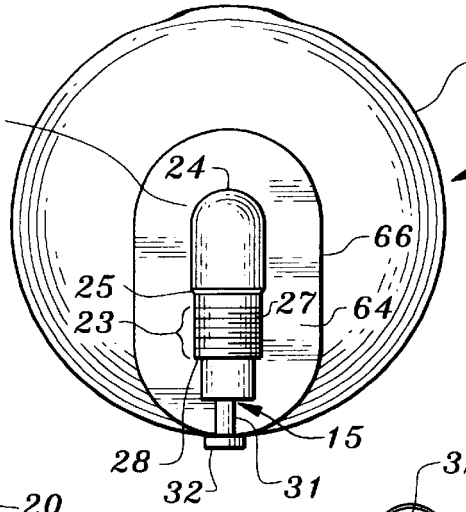

Fig. 4

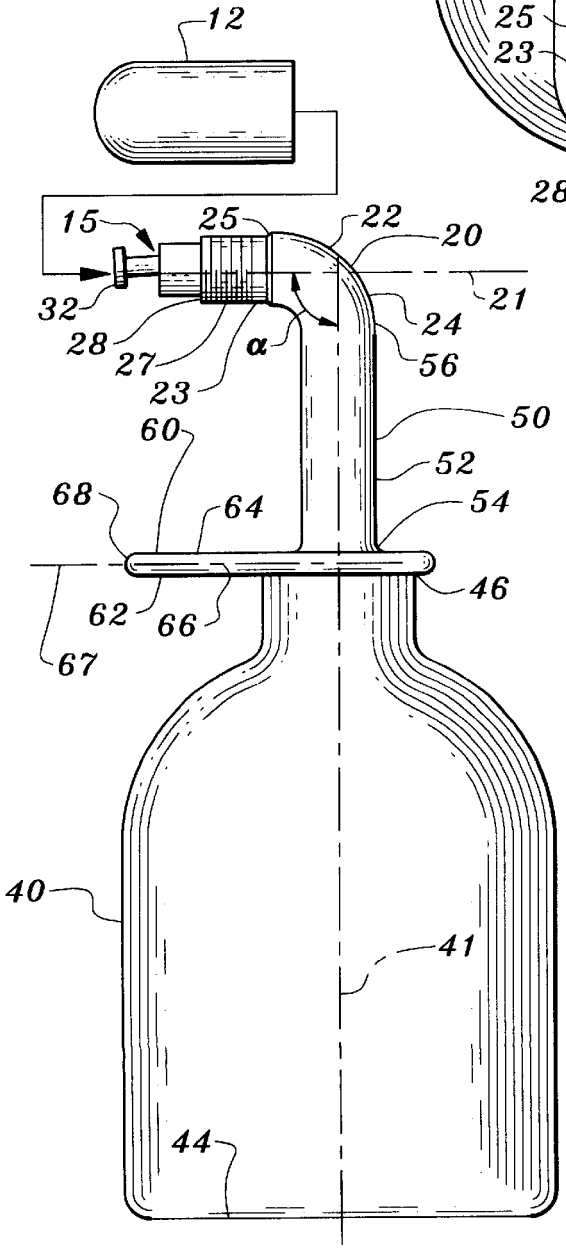

Fig. 5

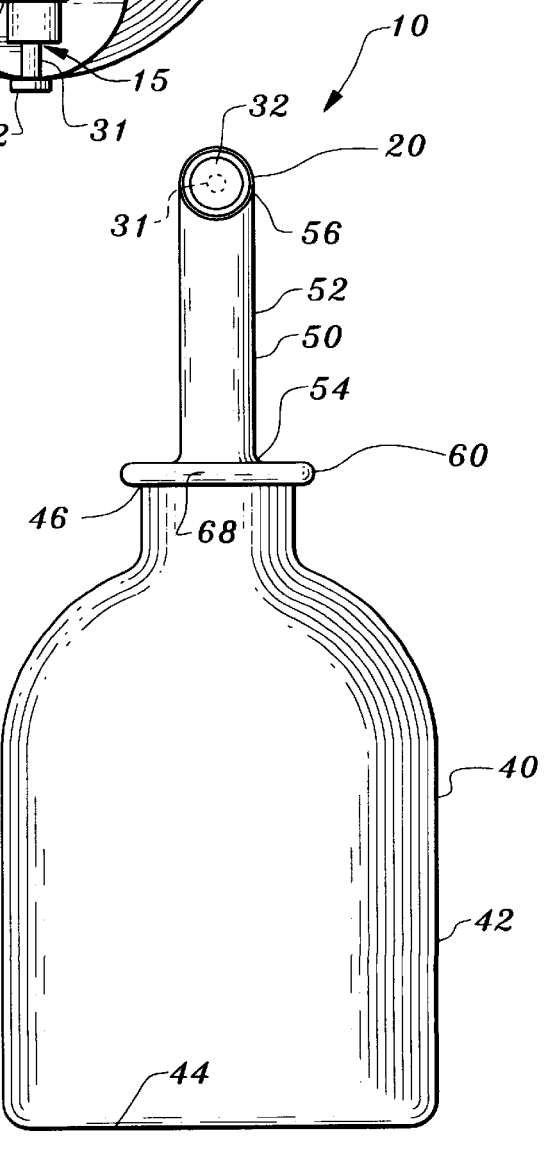

Fig. 6

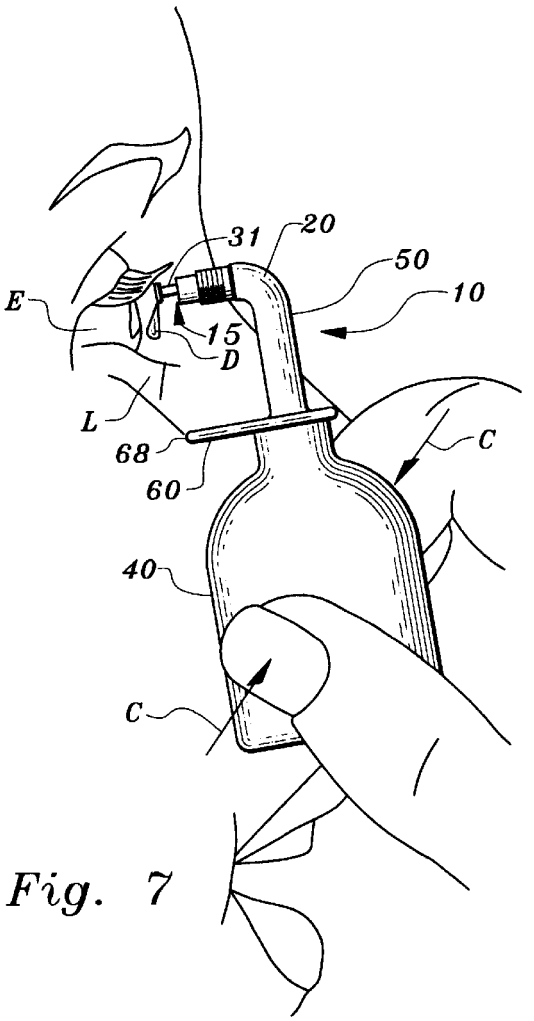

Fig. 7

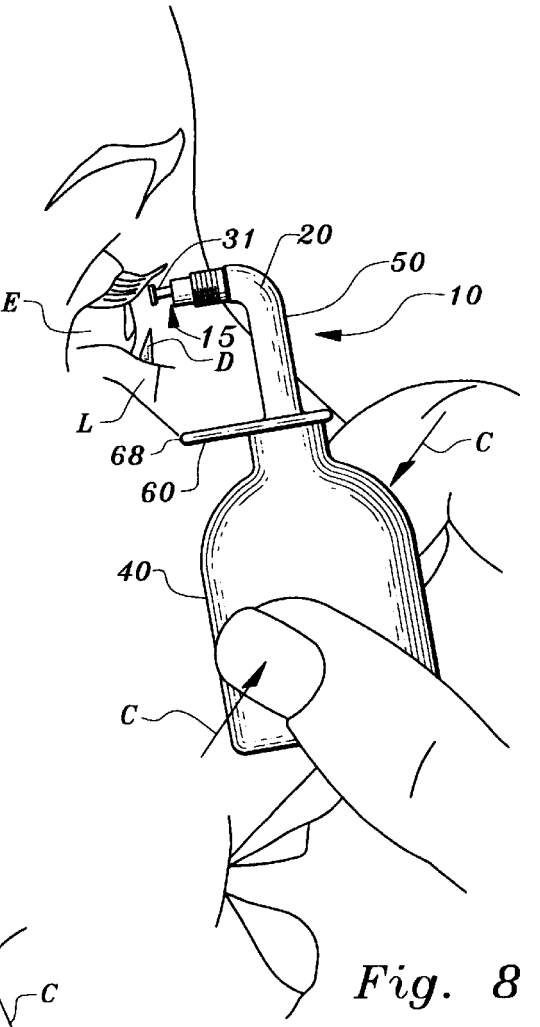

Fig. 8

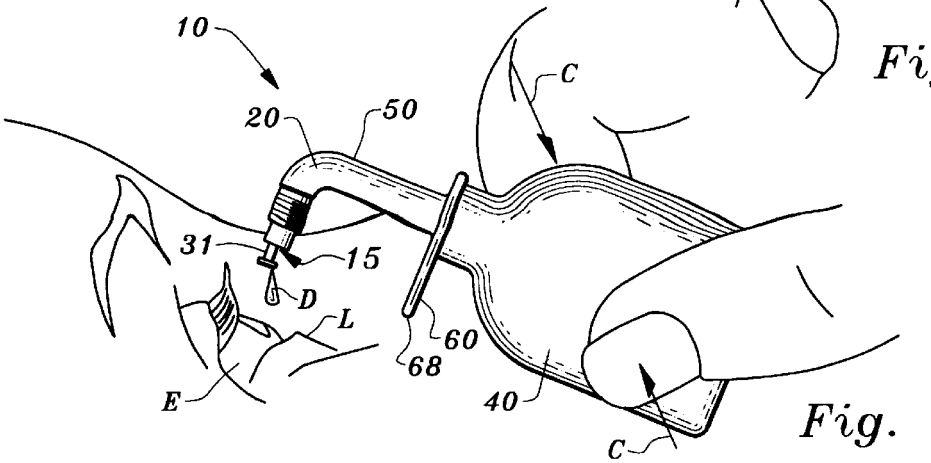

Fig. 9

LIQUID DROPPER FOR UPRIGHT EYE DROP INSTILLATION

FIELD OF THE INVENTION

This invention relates to droppers for dispensing liquids. More particularly, this invention relates to droppers for instilling medicinal liquids, i.e., eye drops, in a person's eye while both the person's head and the dropper are oriented in a substantially upright position. It may also be used, however, in the conventional way of instilling drops into the eye where the head is tilted back and the bottle is held above.

BACKGROUND OF THE INVENTION

Self-administration of medicinal eye drops tends to be both annoying and awkward. Typically, a person's head must first be tilted backward until the person is looking straight above. This creates a maximal target area of the person's eye and tends to help retain the falling eye drop into the person's eye. Then, while maintaining the person's head in this extended position, the person must invert a conventional eye dropper bottle over the eye and simultaneously attempt to precisely position the tip of the dropper directly over the target eye area while holding their eyelids open with the other hand. Once properly positioned, the person must then squeeze the reservoir of the dropper bottle to dispense the medicinal liquid, without moving either their head or the dropper.

Several factors complicate this conventional eye drop installation procedure. First, it is physically difficult for many persons, particularly when self-administering the eye drops, to both position and maintain their heads in a tilted back orientation. Second, many persons have difficulty raising their arms up over their heads due to limitation of motion of the wrist or shoulder, thus making it difficult for such persons to accurately position a conventional eye dropper bottle over the targeted eye area. Third, there are some individuals who may get vertigo or dizziness when placing their head in a backward position while instilling drops into their eyes.

One logical solution to the difficulty of raising a dropper bottle over the person's head is to configure the eye dropper bottle in an upright manner with a tip having an opening for release of drops located above a reservoir. One such prior art eye dropper bottle is described in the patent to Podell (U.S. Pat. No. 3,756,478). Some bottles deliver fluid in such an upright manner by utilizing a tube that extends from the reservoir where the liquid is stored to an outlet above. Such an upright orientation has many problems, however. First, small pockets of air are trapped between drops of liquid within the tube of such a conventional upright dropper, and when the reservoir of the dropper is squeezed, a mixture of air and medicinal liquid will result. The air/liquid droplet often will not release from the tip of the dropper in a consistent fashion. Also, the air to liquid proportions of the droplet vary so widely that it is not accurately quantifiable, so the person is not able to determine if the drop was enough of a dosage or if further doses are needed.

Also, if the tip of the dropper bottle is not held in a substantially inverted position with the tip directed downward, an eye drop may adhere along the exterior of the tip away from the opening of the tip. Hence, the drop will be released at a point spaced away from the opening of the tip of the dropper and tend to miss the person's eye altogether. Often a drop will adhere to the tip of the dropper and will not release until a second drop is expressed from the bottle. This causes considerable waste as the drop(s) or a portion of them never release from the tip.

All of the above factors further amplify the difficulty of self-administering an eye drop. Hence, a person may be substantially impeded from accurately and reliably self-administering an eye drop solution.

Due to the inherent inaccuracy associated with the conventional process of instilling eye drops, a person may instill either more or less than the prescribed dosage. For example, recognizing that a portion of the intended dosage has missed its target, a person may elect to administer a substantially increased dosage based upon his subjective assessment of the portion of each droplet that actually reached or missed its intended target area. If too much medicinal liquid is instilled, the overdose could prove detrimental to the person. Additionally, overdosing and waste from inaccuracy may cause the prescription volume to be prematurely consumed, thereby shortening the duration of the treatment and potentially failing to adequately treat the condition for which the medicine was intended. It also greatly adds to the expense of treating ocular conditions, especially chronic situations such as glaucoma. Correspondingly, if the person fails to instill the required dosage in his eye, the treatment may be inadequate.

The prior art is replete with numerous attempts to provide devices to more easily instill medicinal liquids in a person's eye. The bulk of the attempted methods still require that the head be tilted back while simultaneously dispensing the liquid eye medicine. Various devices described in the prior art incorporate eye cups which are placed fully over at least one eye before dispensing the medicinal liquid. These devices are configured to wash the eye, rather than deliver drops of medication.

Today, standard dropper bottles consist of a small deformable reservoir and a conically-shaped tip. These standard dropper bottles must be inverted over a person's eye during use. Many manufacturers market both over-the-counter and prescription eye drop solutions which are dispensed from these conventional eye dropper bottles.

A variation of standard dropper bottles is described by Menchel et al. in U.S. Pat. No. 5,069,675. The Menchel patent discloses an applicator for liquid eye preparations which includes a resilient container and associated head similar to those described above. The Menchel dropper bottle differs only in that a different type of cap is placed over the head of the dropper. Menchel's cap includes a laterally protruding spout which is rested against a person's lower eyelid while the person self-administers the medicinal liquid into his eye. However, Menchel's dropper must also still be inverted, with the reservoir of medicinal liquid positioned above the spout, to allow instillation of the eye drops. Further, placing the tip of the laterally protruding spout of Menchel's invention immediately adjacent the surface of the eye creates a potentially hazardous circumstance. Any inadvertent movement could cause the tip to jab the person's eye, causing some damage or at least, temporary irritation. Additionally, resting the laterally protruding spout against a person's lower eyelid could contaminate the spout and the remaining medicinal solution contained within the reservoir of the dropper.

Accordingly, a need exists for a dropper for medicinal eye liquid which can be used with the dropper in an upright position, having its reservoir of medicinal liquid positioned below its tip, and a person's head also oriented in an upright position. A corresponding need exists for such an eye dropper where no portion of the dropper tip touches a person's eyes or eyelids while being administered. A further corresponding need exists for such an eye dropper where the

tip of the dropper can be easily and precisely positioned by a person over his eye to maximize accuracy during instillation of the eye drops. This can be accomplished best by the use of a mirror where both the eye and the tip of the bottle are well visualized. Finally, a need exists for such an eye dropper capable of discharging eye drops of substantially equivalent volume to ensure accurate dosage of the medicinal liquid is administered to a patient's eye.

SUMMARY OF THE INVENTION

The present invention is designed so that an individual can instill the eye drops without extending his/her head or elevating the bottle above the head. It is best accomplished with the use of a mirror. Mirrors are readily available in the home, in the car, at work and even carried by some individuals. By using a mirror, better placement can be obtained and also greater protection is afforded from inadvertently touching any eye structures, especially the cornea. Also, it will prevent touching the eyelids with the tip and contaminating the eye drops in the bottle. If the drop is accurately placed in the eye, there is much less waste and also greater medicinal benefits. Because of the design of the bottle, it does not need to be inverted when instilling eye drops into the eye. Rather, the bottle which is grasped and held by the fingers in an upright position can at all times be seen in the mirror and its approximation to the eye is not obscured by the bottle itself. Thus the tip of the bottle is visible and easily directed to its intended position.

The dropper of the present invention includes a resilient squeezable reservoir for storing a medicinal solution. A supply conduit provides a means to transfer the medicinal solution from the reservoir to a tip of the dropper without inverting the reservoir of the dropper over the dropper tip, i.e., maintaining the bottle in an upright position. The supply conduit can be configured as a hollow tube or can include an outer cylindrical casing which enshrouds either a second smaller diameter hollow delivery tube or a solid rod. The outer casing, in tandem with the hollow delivery tube or solid rod, forms a liquid pathway configured as an elongate cylindrical annulus.

In a most preferred embodiment of the present invention, where a solid elongate cylindrical rod is surrounded by the outer casing, medicinal liquid flows only through the elongate annulus. In a preferred embodiment of the present invention, where the outer casing enshrouds a second smaller diameter hollow delivery tube, medicinal liquid flows through both the delivery tube and the elongate annulus. Providing the supply conduit with an elongate annulus configuration helps prevent air pockets from being trapped within the fluid column within the supply conduit.

The supply conduit is preferably slightly bent near its midsection so that its inlet will be located at the lowest point of the reservoir of the dropper. The dropper is tilted slightly forward during use, hence, the lowest point of the reservoir is at the lower forward corner of the reservoir. Locating the inlet of the supply conduit adjacent this lower forward corner ensures that substantially all the medicinal solution within the reservoir will be used, even though the dropper is not inverted when drops are dispensed. The tip of the conduit and the inlet of the supply conduit are preferably designed to face the same direction.

During use according to a preferred configuration of the invention, the index finger is used to retract the outer margin of the lower eyelid away from the eye, thus creating a small pocket into which the drop is instilled. The tip of the bottle is then placed slightly above the created pocket of the lower eyelid. Using a mirror both the eyelid and the tip of the bottle can be well visualized and placement guaranteed. Once the dropper has been properly positioned, the side walls of the reservoir are manually squeezed to displace the medicinal solution up the supply conduit and out the tip of the dropper. Fluid movement of the delivery tube or solid rod within the outer casing of either embodiment causes sufficient physical disturbance to ensure any inadvertently trapped air pockets are dislodged to prevent a mixture of air and medicinal liquid during instillation.

The bottle is designed with a positioning notch in its upper portion and this area is placed over the tip of the finger that is retracting the eyelid. This permits better placement and also protects from touching eye structures. If another individual, such as a spouse or an assistant, is instilling drops into the patient's eye, the finger beneath the positioning notch of the bottle prevents the patient from unexpectedly moving forward into the tip of the bottle and being harmed. The forward movement of the patient will only result in pushing the hand of the assistant and the bottle away from the eye.

Where the most preferred embodiment of dropper of the present invention includes a supply conduit having an elongate solid rod enshrouded within the outer casing, medicinal liquid will be discharged from the outlet of the supply conduit's elongate annulus. This particular configuration of the present invention also preferably includes a smooth, round ball at the tip of the rod. The ball provides a preferential low point at the tip of the supply conduit which will tend to cause droplets of medicinal liquid to form on and release from the underbelly of the ball. The smooth, round ball also provides additional safety should it inadvertently touch the person's eye.

There may be circumstances where the patient or an assistant desires to use the present invention bottle in the conventional way of extending the head back and elevating the bottle above the head while dropping the drop from above. This is especially true when the patient does not have access to a mirror to visualize the eye while instilling the eye drop. The design of the invention bottle also permits this method of instilling drops into the eye and is easier to use than the present bottles available today. The bottle is grasped with the fingers and the horizontal tip of the dropper is turned toward the eye and held above the eye while simply releasing the drop from above. There is no need to elevate the bottle in a fully vertical manner. Rather, the bottle can be held in a nearly horizontal manner while instilling the drop. This makes it much easier on the elevation of the arm and the shoulder and the backward extension of the head of the patient. It is the versatility of the current invention dropper that makes it so desirable.

OBJECTS OF THE INVENTION

A primary object of the present invention is to provide an eye dropper which allows a person's head to be oriented in a normal upright position while eye drops are instilled.

Another object of the present invention is to provide an eye dropper that can accurately target the tip of the dropper over the eye to allow precise eye drop instillation.

Another object of the present invention is to provide an eye dropper configured to prevent inadvertent movement of the dropper and its tip, thereby preventing accidental injury to the tissues of the eye.

Another object of the present invention is to provide a dropper which maximizes utilization of the medicinal liquid within the reservoir and avoids waste.

Another object of the present invention is to provide an eye dropper that may be used without being raised over a person's head.

Another object of the present invention is to provide an eye dropper to consistently and reliably accurately target the tip of the eye dropper over the eye to minimize the number of dispensed eye drops which do not land on the intended target area of the eye.

Another object of the present invention is to provide an eye dropper which discourages entrapment of air bubbles in a supply conduit so that bubbling at an outlet of the dropper is avoided and drops of consistent size are dispensed.

Another object of the present invention is to provide an eye dropper bottle which can either be used in an upright fashion or in a conventional tilted fashion.

Other further objects of the present invention will become apparent from a careful reading of the included drawing figures, the claims and detailed description of the invention.

BRIEF DESCRIPTION OF THE DRAWINGS

FIG. **1** is a side elevation view of an upper end of a most preferred embodiment of the dropper of the present invention in use with a drop of liquid about to release from the underbelly of a ball at a tip of the dropper and into a person's eye.

FIG. **2** is a side cross-sectional elevation view of the most preferred embodiment of the dropper of the present invention.

FIG. **3** is a side cross-sectional elevation view of the preferred embodiment of the dropper of the present invention.

FIG. **4** is a top plan view of the preferred embodiment of the dropper of the present invention.

FIG. **5** is a side elevation view of the preferred embodiment of the dropper of the present invention.

FIG. **6** is a front elevation view of the preferred embodiment of the dropper of the present invention.

FIG. **7** is a side elevation view of the preferred embodiment of the dropper of the present invention in use with a drop about to release from the tip of the dropper.

FIG. **8** is a side elevation view of the preferred embodiment of the dropper of the present invention in use with a drop of liquid having been released from the tip of the dropper and entering a pocket formed between a person's eye and a lower eyelid.

FIG. **9** is a side elevation view of the preferred embodiment of the dropper of the present invention in use with a drop of liquid being released from the tip of the dropper in the conventional way where the head of the person is tilted back and the bottle is elevated above the head.

DESCRIPTION OF THE PREFERRED EMBODIMENT

Referring to the drawings wherein like reference numerals represent like parts throughout the various drawing figures, reference numeral **10** (FIG. **3**) is directed to a dropper for instilling liquids in a person's eye E while both the dropper **10** and the person's head are oriented in an upright position. The dropper **10** is oriented in a substantially upright position when its liquid reservoir **40** is lower than an opening **32** through which droplets D (FIG. **1**) of medicinal liquid are dispensed.

In essence, and with particular reference to FIG. **3**, the basic details of a preferred embodiment of the dropper **10** are described. A supply conduit **15** provides a passageway for medicinal liquid to flow from a reservoir **40** of the dropper **10**. The supply conduit **15** includes a slender delivery tube **30** enshrouded by a larger outer casing **70**. An external housing **20** atop the reservoir **40** supports the supply conduit **15** above the reservoir **40**. A preferably cylindrical collar **50** joins the housing **20** to the reservoir **40** and frictionally engages the outer casing **70** of the supply conduit **15**. A protective shoulder **60** is interposed between the collar **50** and the reservoir **40**. An irregular hollow elongate annulus **80** for liquid flow is formed by the insertion of the delivery tube **30** within the outer casing **70**.

More specifically, and with particular initial reference to FIGS. **3** and **4**, details of the preferred embodiment of the dropper **10** of the present invention are described. The dropper **10** of the present invention includes a deformable reservoir **40** having a vertical center line **41** oriented preferably substantially perpendicular to a central axis **21** of an extension **27** at an upper end of the housing **20** at an angle α (FIG. **5**).

The reservoir **40** of the dropper **10** includes a preferably cylindrical side wall **42** which extends and merges with a circular base **44** to form the floor of the reservoir **40**. A circular upper end **46** of the reservoir **40** opposite the base **44** forms an open end of the reservoir **40** (FIG. **3**). The sidewall **42** is preferably formed of sufficiently soft plastic to allow the side wall **42** to be squeezed inward somewhat.

A mateable collar **50** releasably couples with the upper end **46** of the cylindrical side wall **42** of the reservoir **40**. The collar **50** includes an elongate cylindrical surface **52** which extends from a point adjacent the upper end **46** of the reservoir **40** to join a lower portion of the housing **20** of the dropper **10** to the reservoir **40**. A bottom edge **54** of the collar **50** is located at a lower end of the cylindrical surface **52** adjacent the upper end **46** of the reservoir **40**. An opposing top portion **56** of the collar **50** is located adjacent a lower portion of the housing **20** of the dropper **10**. The collar **50** is sized to slidably receive and retain the outer casing **70** of the supply conduit **15** within its cylindrical surface **52**. The cylindrical surface **52** of the collar **50** has sufficient height to accurately position the tip **31** of the dropper **10** over a person's eye E for accurate eye drop instillation when the dropper **10** is placed in position against the person's cheek prior to use (FIG. **7**).

A shoulder **60** extends laterally from and surrounds the bottom edge **54** of the cylindrical surface **52** of the collar **50** (FIG. **3**). The shoulder **60** includes a planar lower surface **62** opposite a parallel planar upper surface **64**. When the collar **50** is coupled with the reservoir **40**, the planar lower surface **62** of the shoulder **60** abuts the upper edge **46** of the reservoir **40**. The shoulder **60** is oblong having an oval perimeter **66** (FIG. **5**). A major axis **67** of the oval perimeter **66** is preferably parallel to the central axis **21** of the housing extension **27**. An apogee **68** at a distal end of the oval perimeter **66** of the shoulder **60** is located a distance from the centerline **41** of the reservoir **40** which coincides with the outer radius of the cylindrical side wall **42** of the reservoir **40** of the dropper **10** (FIG. **3**) and the radial perpendicular distance of the tip **31** from the centerline **41** of the reservoir **40**.

The shoulder **60** of the dropper **10** serves several purposes. First, it prevents inadvertent impact of the tip **31** of the dropper **10** on a person's eye E while the person instills the medicinal solution. Second, the shoulder **60** ensures that the tip **31** of the dropper **10** is correctly positioned directly above the person's eye E and the receptive well formed in

the lower eyelid L. Additionally, the shoulder **60** serves to minimize potential reflexive blinking by securely retracting the lower eyelid L while instilling the medicinal solution.

The dropper **10** further includes the elongate housing **20** (FIG. **3**) extending up from the collar **50** which frictionally engages and supports the supply conduit **15**. The housing **20** has a generally elongate cylindrical shape and is preferably made from a deformable and resilient thermoplastic material which is capable of being used in an injection molding process. The housing **20** and collar **50** are extensions of each other with no clear transition from one to the other. The housing **20** bends to cause the extension **27** to align the central axis **21**, is hollow, with an interior cavity **26** and an outer surface **22**. The interior angle α formed between the central axis **21** of the extension **27** and the center line **41** of the reservoir **40** is shown as approximately 90° but may be modified somewhat to accommodate varying reservoir **40** shapes. Hence, the dropper **10** of the present invention could be manufactured so that the interior angle α is as low as 60° and as high as 120°.

At one end, the outer surface **22** of the housing **20** includes the extension **27** with a threaded portion **23** to threadably receive a sealing cap **12** (FIG. **5**). The cap **12** covers the tip **31** while the dropper **10** is not in use to prevent undesired liquid leakage and contamination of the tip **31** by environmental particulates. At an end opposite the threaded portion **23**, the outer surface **22** forms a rear surface **24**. A radially reducing taper portion **25** extends from the outer surface **22** of the housing **20** in a direction away from the rear surface **24** to join the cylindrical extension **27** to the outer surface **22**. The extension **27** terminates at a planar annular fore end **28**, which is furthest from the centerline **41** of the reservoir **40**. The extension **27** has a smaller diameter than the outer surface **22** and the threaded portion **23** of the housing **20** to allow the cap **12** to be threaded onto the threaded portion **23** and form a sealing connection with the taper portion **25**.

With reference to FIG. **3**, the supply conduit **15** is frictionally engaged within the cavity **26** of the housing **20**. The supply conduit **15** includes a larger, preferably cylindrical, outer casing **70** which substantially enshrouds a slender elongate hollow delivery tube **30**. The outer casing **70** of the supply conduit **15** extends from a nose **71** to terminate at a shoe **77** positioned adjacent the base **44** of the reservoir **40**.

In a most preferred embodiment of the dropper **110** (FIG. **2**), the shoe **77** has a frustoconical shape to create a taper which allows the shoe **77** of the casing **70** to come closer to the lower forward corner of the reservoir **40** to maximize consumption of liquid stored within the reservoir **40**. In a preferred embodiment of the dropper **10** (FIG. **3**), the shoe **77** is preferably cylindrical. The reservoir **40** will still be substantially drained in this preferred embodiment of the dropper **10** since the hollow delivery tube **30** has a smaller radius than that of the outer casing **70**, and hence, can come equally close to the lower forward corner of the reservoir **40**.

A lateral leg **72** of the outer casing **70** extends from the nose end **71** through the interior cavity **26** of the housing **20**. The lateral leg **72** of the outer casing **70** forms a preferably right angle top bend **73** with a substantially vertical upper leg **74** of the casing **70** within the cavity **26** adjacent the rear surface **24** of the housing **20**. The substantially vertical upper leg **74** of the outer casing **70** extends downward from the top bend **73** along the vertical center line **41** of the reservoir **40**. The upper leg **74** forms an elbow bend **75** within the upper portion of the reservoir **40** having an angle β with a lower leg **76** of the outer casing **70** (FIG. **3**). The angle β of the elbow bend **75** in the outer casing **70** is sufficient to locate the shoe **77** of the lower leg **76** of the outer casing **70** adjacent the base **44** of the reservoir **40** nearest the cylindrical side wall **42** of the reservoir **40** on a forward portion of the reservoir **40** beneath the orifice **32** of the tip **31** of the delivery tube **30**. The tip **31** is provided with a blunted annular bumper surrounding the orifice **32** to minimize danger of injury to the eye E should the tip **31** inadvertently contact the eye. The elbow bend **75** ensures that the shoe **77** of the outer casing **70** remains immersed in liquid until substantially all the liquid has been displaced from the reservoir **40**. The casing **70** includes an exterior cylindrical surface **79** which is frictionally engaged by the housing **20** and collar **50**. An opposing interior cylindrical surface **78** of the casing **70** is adjacent the liquid and touches the hollow delivery tube **30** at various locations along the length of the casing.

With further reference to FIG. **3** the hollow delivery tube **30**, preferably of slightly greater length than the outer casing **70**, is positioned within the outer casing **70** such that a tip **31** and an opposing tail **33** of the delivery tube **30** are spaced approximately equidistant from the nose **71** and shoe **77**, respectively, of the outer casing **70**. The delivery tube **30** is preferably made of a resilient thermoplastic material. The delivery tube **30** is preferably initially formed as a straight length of cylindrical tubing. The slender delivery tube **30** acts as a fluid conduit to transport medicinal liquid from the reservoir **40** to the tip **31** of the dropper **10**. Fluid flows through an intake **34** in the tail **33** of the delivery tube **30** to exit out an orifice **32** in the tip **31** of the delivery tube **30**. The orifice **32** in the tip **31** is preferably located a distance away from the center line **41** of the reservoir **40** the same as the distance which the side walls **42** of the reservoir **40** are located away from the center line **41** of the reservoir **40**. When placed in an upright position, the tip **31** of the dropper **10** is substantially vertically aligned with the side walls **42** of the reservoir **40**.

The delivery tube **30** has a preferably cylindrical elongate exterior wall **35**. The exterior wall **35** of the delivery tube **30** rests adjacent and is frictionally engaged by the interior surface **78** of the outer casing **70** at various locations along the casing **70**. By slidably inserting the delivery tube **30** within the outer casing **70**, the natural resiliency of the delivery tube **30** will cause the exterior wall **35** to impinge upon the interior surface **78** of the outer casing **70** at various points along the length of the outer casing **70** adjacent regions where the outer casing **70** is bent. Engagement points include the area adjacent the elbow bend **75** and top bend **73** of the outer casing **70**. The material of the delivery tube **30** should have sufficient flexibility to be slidably engaged within the outer casing **70**, during assembly, but sufficient resiliency to prevent the delivery tube **30** from being easily withdrawn from the outer casing **70**.

An elongate fluid annulus **80** is formed by the insertion of the delivery tube **30** into the outer casing **70**. The annulus **80** has a fluid volume determined by the inner diameter of the outer casing **70** less the outer diameter of the delivery tube **30**. The fluid volume of the annulus **80** is preferably substantially greater than the fluid volume of the delivery tube **30**. The annulus **80** includes an annular entry **82** defined by the shoe **77** of the outer casing **70** and the exterior wall **35** of the delivery tube **30**. An opposing annular outlet **84** is located nearest the fore end **28** of the housing **20** and is defined by the nose **71** of the outer casing **70** and the exterior wall **35** of of the delivery tube **30**. The fluid annulus **80** has a somewhat irregular cross-section along its length due to

the manner in which the resilient delivery tube **30** frictionally engages the inner surface **78** of the outer casing **70** at various points along its length. The delivery tube **30** is preferably decentralized within the outer casing **70**. Decentralization, creating irregular cross-sections along the length of the annulus **80**, minimizes the probability that fluid surface tension and capillary attraction will create blankets of fluid within the annulus **80** which would tend to trap air between columns of fluid within the annulus **80**.

The fluid annulus **80** provides a pathway for liquids which tends to not allow air bubbles to become trapped therein. Hence, a steady stream of liquid is dispensed at the tip **31**, rather than occasional sputtering of liquid when air pockets are discharged.

With reference to FIGS. **1** and **2**, in a most preferred embodiment of the dropper **110** of the present invention, a solid elongate rod **130**, rather than a hollow delivery tube **30**, is slidably inserted within the outer casing **70** of the supply conduit **15**. Hence, in this most preferred embodiment **110**, the annulus **80** is the sole fluid pathway through which fluid flows from the reservoir **40** to an outlet **84** of the annulus **80** for discharge toward a person's eye E. The elongate rod **130** extends from an end **133** adjacent the shoe **77** of the outer casing **70** to terminate at an opposing tip **131** adjacent the nose **71** of the outer casing **70**. The tip **131** of the rod **130** extends slightly past the nose **71** of the outer casing **70** so that drops D of medicinal liquid falling from the tip **131** of the rod **130** will not contact the nose **71** of the outer casing **70** as they fall toward a person's eye E.

A round, smooth ball **137** is attached to the tip **131** of the rod **130** to act as a primary point of droplet D formation and departure. The ball **137** has an underbelly **139** which is naturally lower than an exterior wall **135** of the rod **130** where the ball **137** is joined to the tip **131** of the rod **130**. The ball **137** has a diameter preferably approximately two to three times that of the rod **130**. The ball **137** is centered on the tip **131** so that the underbelly **139** of the ball **137** is located lower than the lowest point of the exterior wall **135** of the rod **130** at the tip **131**, when the dropper **110** is in use. When the dropper is angled with the tip **131** point downward, drops migrate to the lowest point on the ball before precise release downward to the eye E.

With reference to FIGS. **7** and **8**, the use and operation of the preferred embodiment of the dropper **10** of the present invention is described. After removing the cap **12** from the housing **20** of the dropper **10**, the reservoir **40** of the dropper **10** is lightly rested adjacent the cheek of the person below the person's eye E. The housing **20** of the dropper **10** is then rotated toward the person's eye E until the apogee **68** of the shoulder **60** of the dropper **10** rests lightly against the outer surface of the person's lower eyelid L. With the apogee **68** of the shoulder **60** continuing to engage the person's lower eyelid L, the entire dropper **10** is drawn slightly downward. The person can place a finger between the reservoir and the lower eyelid L and retract the lower eyelid L to create a pocket to receive dispensed drops D of medicinal liquid. In this position, the reservoir **40** and the shoulder **60** also cooperate to act as a safety guard to prevent the tip **31** of the dropper **10** from inadvertently touching the person's eye E while the dropper **10** is in use.

With the dropper **10** resting adjacent the person's cheek, the resilient cylindrical side walls **42** of the reservoir **40** are manually squeezed inwardly by the person (as shown by the Arrows C in FIGS. **7** and **8**). The volume of the reservoir **40** is thereby decreased, creating a corresponding increase in pressure in the reservoir **40**. The increased pressure causes medicinal fluid within the reservoir **40** to simultaneously flow (Arrows A and B) into both the intake **34** of the delivery tube **30** and the entry **82** of the annulus **80**.

Squeezing the reservoir **40** causes sufficient movement of the delivery tube **30** to ensure any inadvertently trapped air pockets to dislodge and exit the delivery tube **30** before the first droplet D is formed. Prior elimination of the trapped air pockets within the delivery tube **30** prevents the medicinal liquid from being bubbled out into a person's eye E, and instead, allows the medicinal liquid to discharge as uniform droplets D.

Once the fluid exits the opening **32** in the tip **31** of the delivery tube **30** to form a droplet D (FIG. **7**), the droplet D will release from the tip **31** to fall toward and land within the pocket formed by the retraction of the lower lid L of the person's eye E (FIG. **8**). A person continues to squeeze the reservoir **40** of the dropper **10** to instill the prescribed number of eye drops D. Once the appropriate number of eye drops D have been instilled, the shoulder **60** of the dropper **10** may be rotated away from the person's lower eyelid L. The dropper **10** is then removed from the person's cheek to allow the cap **12** to be threaded back over the tip **31** of the dropper **10** onto the housing **20**.

With particular reference to FIGS. **1** and **2**, the use and operation of the most preferred embodiment of the dropper **110** of the present invention is described. As with the preferred embodiment of the dropper **10** of the present invention, the most preferred embodiment of the dropper **110** of the present invention is actuated by manually squeezing the sidewalls **42** of the reservoir **40** of the dropper **110**. However, the medicinal liquid is only able to flow into the entry **88** of the annulus **80**, to rise up the supply conduit **15** to exit out the outlet **84** of the annulus **80**. As the liquid exits the annular outlet **84**, the liquid will tend to wettably adhere to the exterior wall **135** of the rod **130** and flow toward the ball **137** at the tip **131** of the rod **130**. The discharged liquid will continue to flow along the under belly **139** of the ball **137** where it will form a droplet D at the lowest point of the underbelly **139** of the ball **137**. Once the droplet D is of sufficient mass, the droplet D will release from the ball **137** to fall toward the well formed within the lower lid L of the person's eye E (FIG. **1**).

This disclosure is provided to reveal a preferred embodiment of the invention and a best mode for practicing the invention. Having thus described the invention in this way, it should be apparent that various different modifications can be made to the preferred embodiment without departing from the scope and fair meaning of this disclosure.

What is claimed is:

1. A liquid dropper comprising in combination:

a reservoir for holding a liquid to be discharged from the dropper;

said reservoir having an upper end located above a base;

said reservoir having a center line extending through said base and said upper end;

an opening located above said upper end of said reservoir when said dropper is oriented for release of liquid therefrom, said opening aligned with a central axis non-parallel to said center line of said reservoir;

a conduit extending from said opening to an inlet port located within said reservoir;

wherein said conduit includes a hollow outer casing having an elongate rod enshrouded within an inner surface of said casing;

said rod extending from a tip adjacent a nose of said casing to terminate at a low end adjacent a shoe of said casing; and

said casing and said rod forming in combination an elongate hollow annulus, said annulus having an entry adjacent said said shoe of said casing and an outlet adjacent said nose of said casing.

2. The dropper of claim **1** wherein said rod is of sufficient length to extend slightly beyond a nose of said casing, such that droplets of liquid tend to form on said tip and fall toward a user's eye.

3. The dropper of claim **2** wherein said tip of said rod includes a ball attached to said tip, such that droplets of liquid tend to form along an underbelly of said ball prior to release from said tip of said rod.

4. A liquid dropper comprising in combination:

a reservoir for holding a liquid to be discharged from the dropper;

said reservoir having an upper end located above a base;

said reservoir having a center line extending through said base and said upper end;

an opening located above said upper end of said reservoir when said dropper is oriented for release of liquid therefrom, said opening aligned with a central axis non-parallel to said center line of said reservoir;

a conduit extending from said opening to an inlet port located within said reservoir;

wherein said conduit includes a hollow outer casing having an elongate tube enshrouded within an inner surface of said casing;

said tube extending from a tip adjacent a nose of said casing to terminate at a low end adjacent a shoe of said casing;

wherein said tip of said tube includes an orifice through which liquid may be discharged to fall toward the eye of a user; and

wherein said low end of said tube includes an intake through which liquid may enter said tube to flow through said tube toward said orifice.

5. The dropper of claim **4** wherein said tip of said tube extends slightly beyond said nose of said casing, such that a drop forming at an end of said tip may drop from said tip to fall toward a user's eye.

6. The dropper of claim **5** wherein said low end of said tube extends beyond said shoe of said casing.

7. A liquid dropper comprising in combination:

a reservoir for holding a liquid to be discharged from the dropper;

said reservoir having an upper end located above a base;

said reservoir having a center line extending through said base and said upper end;

an opening located above said upper end of said reservoir when said dropper is oriented for release of liquid therefrom, said opening aligned with a central axis non-parallel to said center line of said reservoir;

a conduit extending from said opening to an inlet port located within said reservoir;

wherein said opening is located at a tip of an extension, said extension attached to said reservoir and oriented symmetrically about said central axis, said central axis intersecting said center line with said opening located in front of said center line;

wherein an interior angle between said central axis and said center line and located beneath said extension measures between 60° and 120°;

wherein said opening is located a distance from said center line of said reservoir similar to a distance said side wall is located spaced away from said center line of said reservoir; and

wherein a shoulder is located between said extension and said reservoir, said shoulder having an oval perimeter with a major axis of the oval substantially parallel to said central axis and an apogee defining a portion of said shoulder most distant from said center line of said reservoir, said apogee extending away from said center line at least as far as said opening is from said center line, such that said shoulder can assist a user in keeping the opening of the extension from contacting the user's eye when the liquid dropper is utilized to dispense eye medication in an upright manner.

8. A method for manually delivering drops of liquid from a reservoir while holding the reservoir upright, the method including the steps of:

providing the reservoir with an upper end located over a base with the reservoir having a center line extending through the base and the upper end;

locating an opening above the base of the reservoir;

spacing the opening laterally away from the center line of the reservoir;

extending a conduit from the opening into the reservoir;

applying pressure to liquid in the reservoir, the pressure sufficient to cause liquid to rise up the conduit and exit the opening; and

providing a shoulder between the opening and the reservoir, the shoulder extending away from the center line and beneath the opening a distance away from the center line at least as great as a distance that the opening extends away from the center line.

9. An eye medication dropper for discharge of liquid eye medication by persons who have difficulty tilting the head back and who have difficultly lifting the dropper above their eye being medicated, the dropper comprising in combination:

a liquid medication reservoir having a deformable side wall and a base below upper end;

said reservoir having a center line extending between said base and said upper end;

an opening located above said reservoir and spaced laterally away from said center line of said reservoir;

a conduit extending from an inlet port located within said reservoir to said opening, said conduit sufficiently constricted to allow the person to squeeze said side wall of said reservoir and control release of drops from said opening while said reservoir is oriented below said opening; and

wherein said conduit includes an inner rod extending along at least a portion of an interior thereof, such that said conduit has an interior with a somewhat annular cross-section.

* * * * *