US008177385B2

(12) **United States Patent**
Porciatti

(10) **Patent No.: US 8,177,385 B2**
(45) **Date of Patent: May 15, 2012**

(54) **T-BAR FOR SUSPENDED CEILING WITH HEAT DISSIPATION SYSTEM FOR LED LIGHTING**

(76) Inventor: **Silvio Porciatti**, Weston, FL (US)

(*) Notice: Subject to any disclaimer, the term of this patent is extended or adjusted under 35 U.S.C. 154(b) by 258 days.

(21) Appl. No.: **12/661,252**

(22) Filed: **Mar. 11, 2010**

(65) **Prior Publication Data**

US 2011/0222270 A1 Sep. 15, 2011

(51) **Int. Cl.**
F21S 8/00 (2006.01)

(52) **U.S. Cl.** **362/147**

(58) **Field of Classification Search** 362/147–150, 362/249.02, 311.02, 800
See application file for complete search history.

(56) **References Cited**

U.S. PATENT DOCUMENTS

2004/0213003 A1 10/2004 Lauderdale
2006/0262521 A1* 11/2006 Piepgras et al. 362/149
* cited by examiner

Primary Examiner — Jason Moon Han
(74) *Attorney, Agent, or Firm* — Heisler & Associates

(57) **ABSTRACT**

The T-bar includes an elongate rigid spine extending between terminal ends including either a fixed anchor or adjustable anchor for attachment to adjacent T-bars or other supports. An upper heat sink is provided on an upper portion of the spine to enhance heat transfer from the T-bar to air surrounding upper portions of the T-bar. A light housing is provided on a lower portion of the T-bar which is configured to support a lighting module therein, such as a light emitting diode (LED) light. A lower heat sink is provided above this light housing and integrated into a rest shelf which supports ceiling tiles adjacent the T-bar. A power supply is provided which can be removably attached to the T-bar and provide appropriately conditioned power for the lighting module.

21 Claims, 3 Drawing Sheets

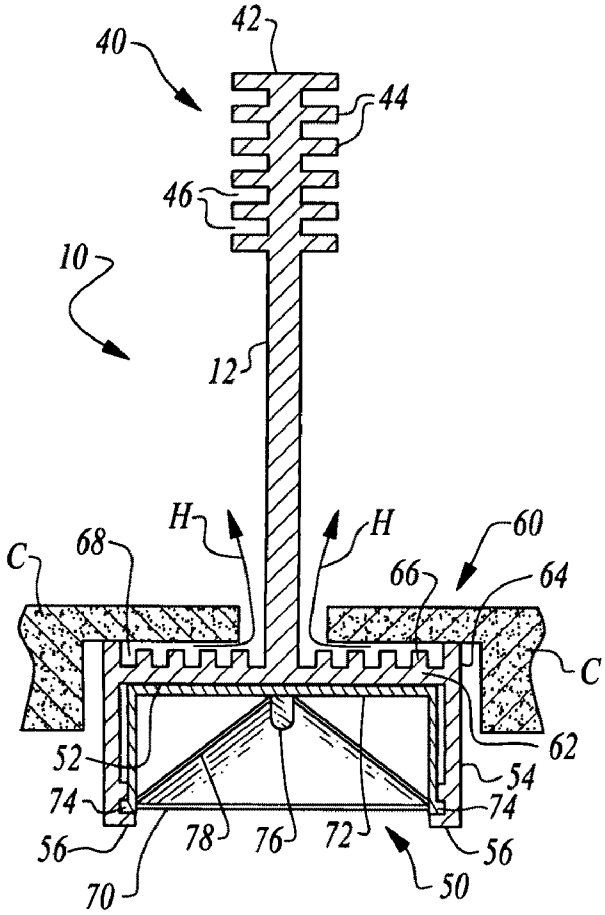

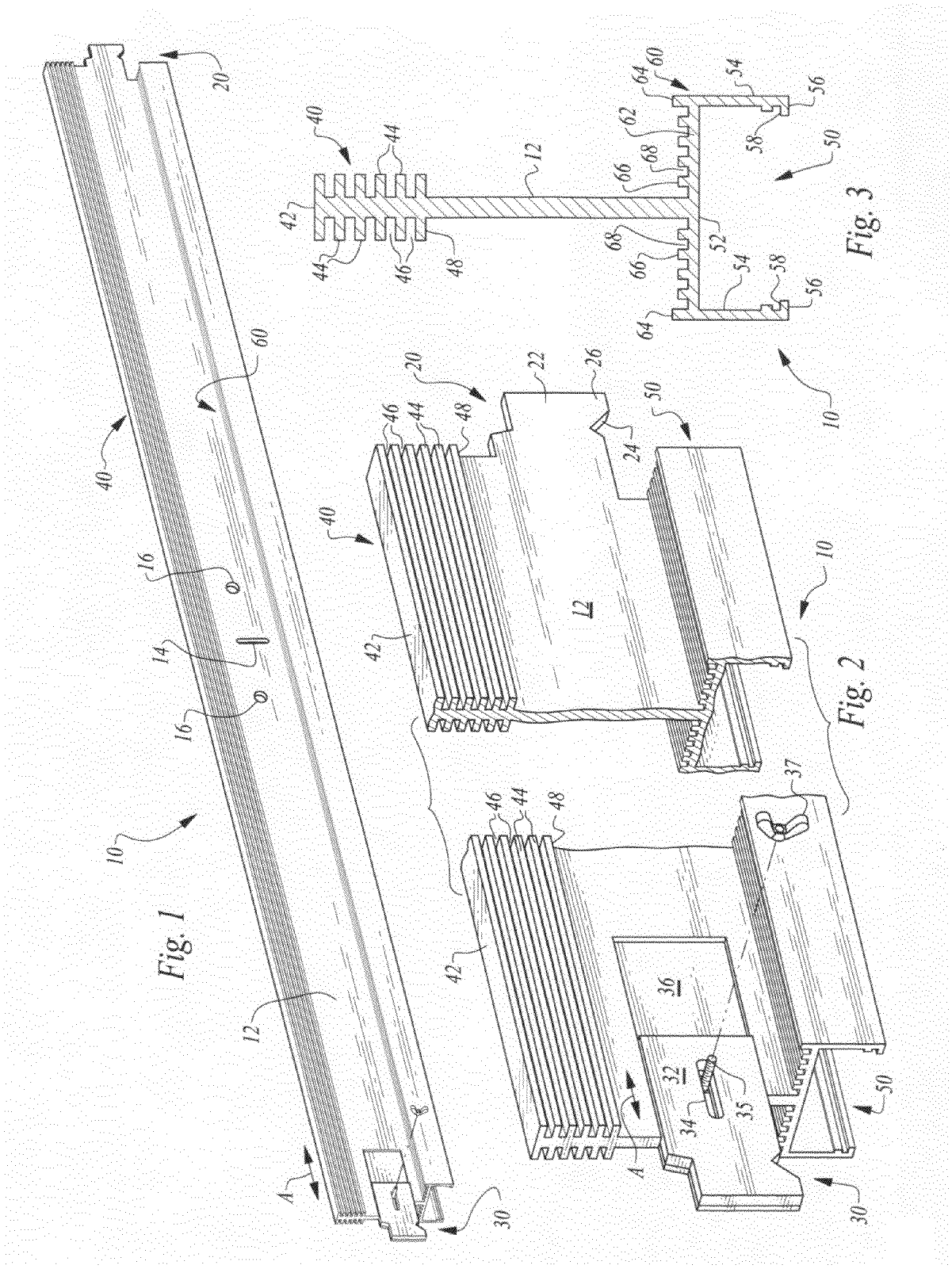
Fig. 1
Fig. 2
Fig. 3

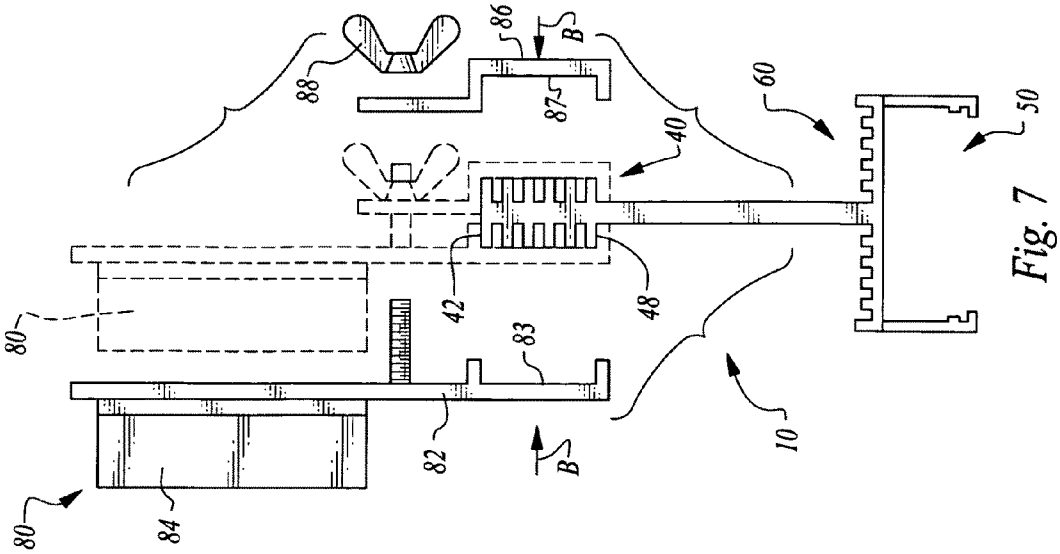

Fig. 7

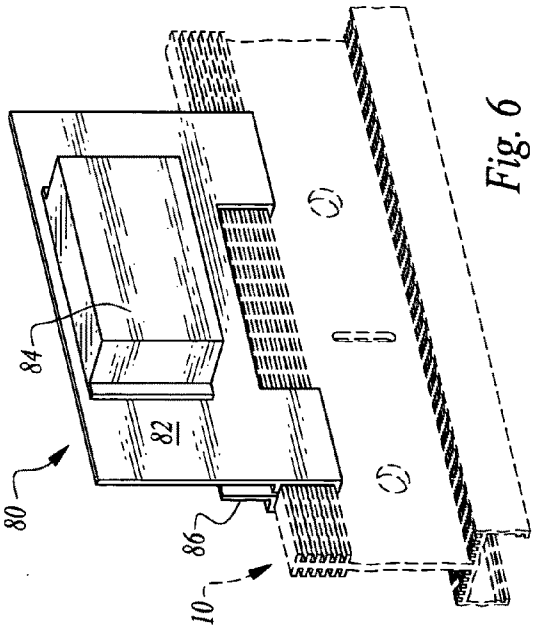

Fig. 6

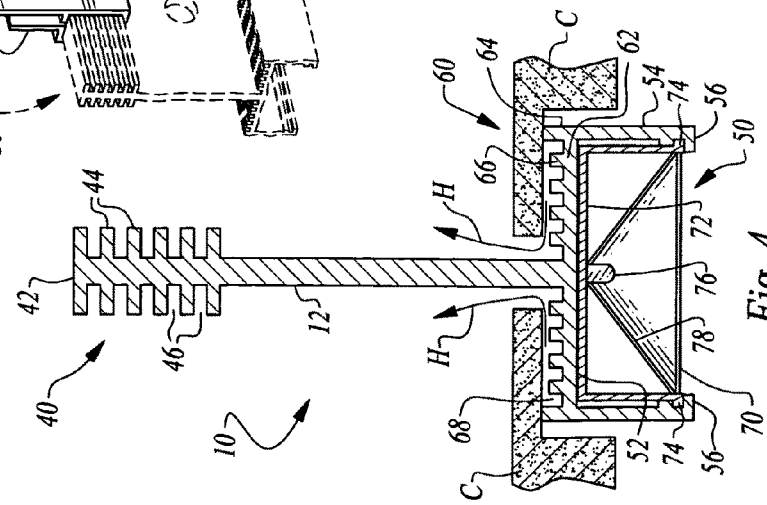

Fig. 4

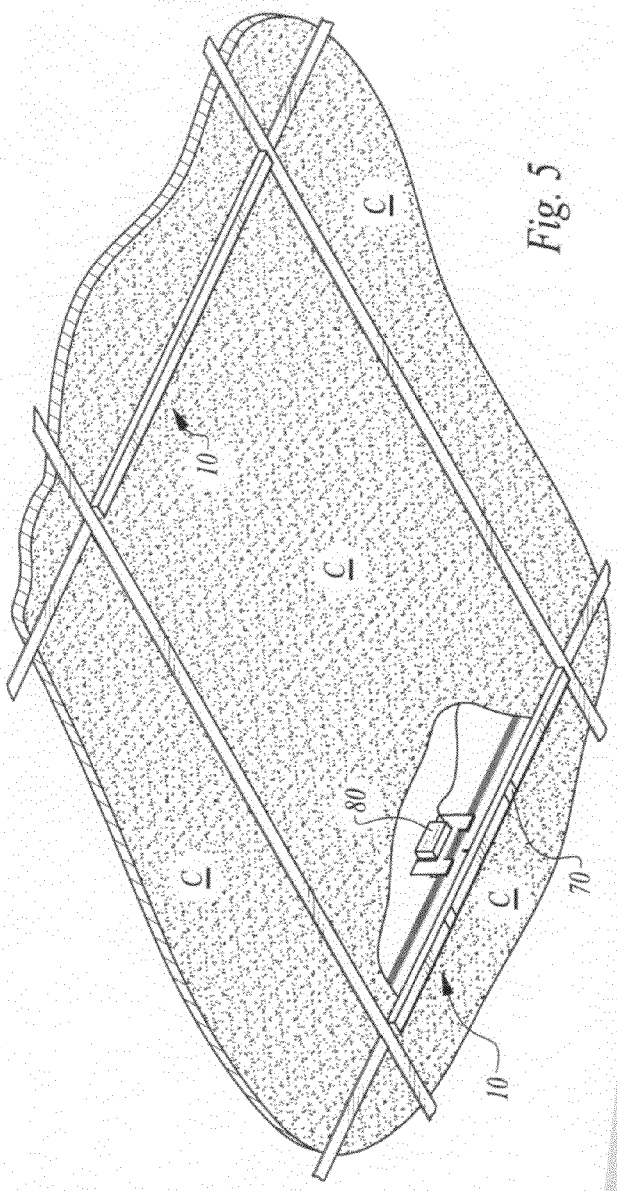

Fig. 5

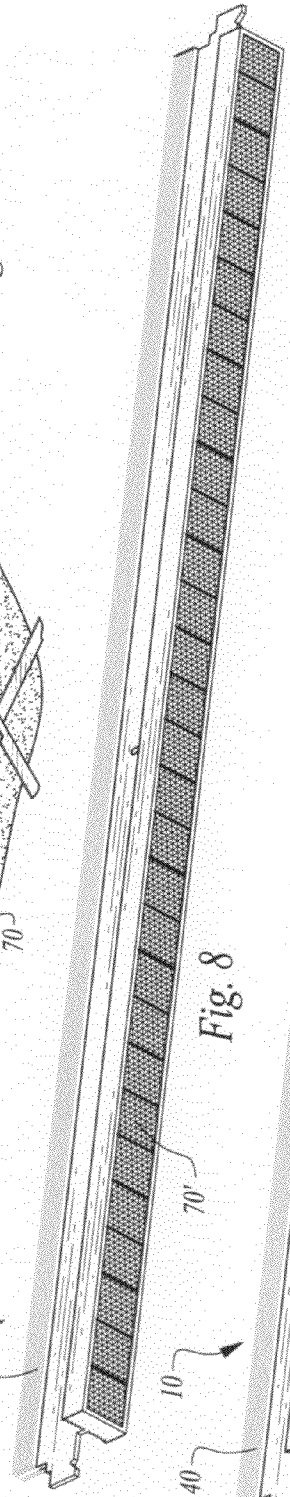

Fig. 8

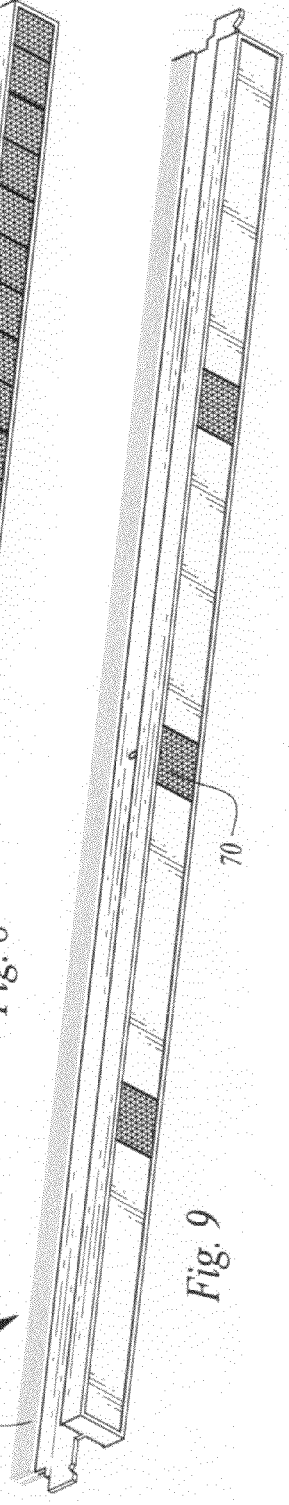

Fig. 9

T-BAR FOR SUSPENDED CEILING WITH HEAT DISSIPATION SYSTEM FOR LED LIGHTING

FIELD OF THE INVENTION

The following invention relates to T-bars for use in supporting ceiling tiles within a suspended ceiling. More particularly, this invention relates to T-bars which include lighting supported therefrom, and particularly LED lighting, with the T-bar configured to include a heat sink for dissipating heat generated by the light source.

BACKGROUND OF THE INVENTION

A common form of surface finish for ceilings, especially within commercial construction is the "dropped ceiling." With a dropped ceiling a lattice of T-bars is suspended at a height desired for the ceiling. Ceiling tiles are provided which have a size and shape matching gaps in this lattice of T-bars. These ceiling tiles are placed within these gaps to fill these gaps between the T-bars. The T-bars generally have a shape with a vertically extending spine portion and a horizontally extending rest shelf so that the T-bar is generally in the form of an upside down "T."

Lighting for interior building spaces can be provided in a variety of different ways. Often the most effective lighting for an interior space is overhead lighting. In a commercial environment where rooms are typically quite large, it is often advantageous to suspend lighting from the ceiling or embed lighting within the ceiling. When the ceiling includes a "dropped ceiling" arrangement, often some of the gaps in the lattice of T-bars are filled with lighting bays. For instance, fluorescent light tubes can reside within lighting bays that are sized to fill typical gaps within the T-bar lattice. Thus, rather than place a ceiling tile within certain gaps, lighting bays are installed.

An important consideration in the design and construction of buildings is the energy utilized by such buildings. One major factor in energy consumption of a building is the efficiency with which the space is heated and cooled. When the space utilizes a dropped ceiling, typically the conditioned space is only that space below the ceiling tiles of the"dropped ceiling." Heating, ventilating and air conditioning (HVAC) ducts can be mounted in gaps between T-bars within the lattice forming the dropped ceiling in place of a ceiling tile, to deliver conditioned air into the conditioned space within the building. Space above the dropped ceiling typically has an undesirably hot or cold temperature compared to the conditioned space below. To enhance the effectiveness of HVAC systems in such buildings, ceiling tiles typically have a degree of resistance to heat transfer therethrough, such that temperature differentials between space above the dropped ceiling and conditioned space below the dropped ceiling can be efficiently maintained.

An additional source of power consumption within a building is the power consumed by lighting. Not only does lighting within a building directly affect energy consumption due to the power utilized to drive the light sources, but also lighting often generates significant heat within the conditioned space which then must be transferred from the space when the space is experiencing an unacceptably high temperature. Prior art attempts to reduce the energy consumption associated with lighting have included use of lower power higher efficiency lighting sources, such as fluorescent lighting and light emitting diode (LED) lighting. Beneficially, such alternative lighting sources both require less power to drive the light sources, and also typically generate less heat, minimizing heat sources which the HVAC systems of the building thus need to contend with. LED lighting also typically has a longer life than other lighting technologies.

One problem that is generated by utilization of LED lightings in particular, is that while a relatively low amount of heat is generated by the LED lighting, this heat is concentrated in a particularly small space directly adjacent the LED electronics required to generate the light. A major factor in the operating life of such LED lighting is the degree to which this heat can be effectively dissipated to avoid excessive heating of the electronics associated with the LED and other components of the LED which experience a shorter operational life when excess temperatures are experienced. Accordingly, a need exists for heat management associated with LED lighting, particularly when LED lighting is incorporated into a dropped ceiling of a building. Secondarily, other light sources and other sources of heat can benefit from having heat associated therewith transferred out of the conditioned space within a building, rather than the heat adding to the heat load within the conditioned space and requiring additional load on the HVAC equipment within the building.

SUMMARY OF THE INVENTION

With this invention, a T-bar is provided for a dropped ceiling which is configured to transfer heat effectively away from T-bar and ceiling mounted light sources and other heat sources, and into a space above a dropped ceiling. The T-bar can have any of a variety of different general cross-sections including a spine and a rest shelf at a lower end of the spine. Anchors are provided at terminal ends of the T-bar for attachment of ends of the T-bar within a conventional dropped ceiling system. For instance, the T-bar anchors can attach to adjacent T-bars or other supports in the forming of an entire lattice of T-bars within an existing conventional dropped ceiling system. A lower portion of the T-bar and beneath the rest shelf includes a light housing which can contain a lighting module therein. In a preferred form of this invention this lighting module includes at least one light emitting diode (LED) light source therein. An upper heat sink is coupled to the spine. This upper heat sink includes fins with gaps between the fins to enhance a rate of heat transfer between the heat sink and air adjacent the upper heat sink and above the ceiling tiles.

The T-bar preferably also includes a lower heat sink in the form of fins extending from the rest shelf. Preferably these fins include an outer fin and short fins closer to the spine than the outer fin. The outer fin is preferably longer than the short fins. In this way, an air pathway is provided from gaps between the fins of the lower heat sink and a ceiling tile resting upon the outer fin, for effective natural convection heat transfer away from the lower heat sink. The lower heat sink and light housing, as well as the spine and upper heat sink are preferably each formed together from a unitary mass of material to maximize heat transfer from the LED or other heat source to the heat sinks and then to the air within the space above the dropped ceiling. The entire T-bar is formed of a material having a higher than average thermal conductivity so that efficient heat transfer away from the LED or other heat source is accomplished.

A power supply for the LED is configured to be attachable to the upper heat sink so that a complete assembly for powering the LED lighting within the T-bar is suspended from the T-bar within the dropped ceiling system. By placing the lighting suspended from a lower surface of the T-bar, gaps within the T-bar lattice of the dropped ceiling system that would

otherwise contain lighting can contain additional ceiling tiles to further enhance a resistance to heat transfer through the dropped ceiling to enhance an overall efficiency of the space conditioned by the HVAC system. Also, the aesthetic appearance of the ceiling can be enhanced by eliminating breaks in the ceiling for large prior art lighting bays. For instance, an entire ceiling of uniform ceiling panels can be provided, including the option to provide unique regular patterns, such as alternating colors in a checkered pattern.

OBJECTS OF THE INVENTION

Accordingly, a primary object of the present invention is to provide a T-bar which supports a light source on a lower side thereof and which includes a heat sink on an upper portion thereof to dissipate heat from the light source.

Another object of the present invention is to provide a T-bar with included heat dissipation structures to dissipate heat from a heat source adjacent a lower surface of the T-bar.

Another object of the present invention is to provide a method for drawing heat away from a light source on a lower portion of a T-bar of a dropped ceiling system.

Another object of the present invention is to provide a dropped ceiling system with T-bars that include lighting therein and associated heat dissipation structures for optimal lighting performance.

Another object of the present invention is to minimize energy utilized by a lighted building space.

Another object of the present invention is to provide lighting for a building space with a minimum power required.

Another object of the present invention is to provide a lighting system for a building space which is easy and inexpensive to install and which exhibits a long life.

Another object of the present invention is to provide a lighting system for a building which can easily be replaced and reconfigured.

Another object of the present invention is to provide an LED light source for mounting within a dropped ceiling of a building and which effectively dissipates heat from the LED light source for optimal service life.

Other further objects of the present invention will become apparent from a careful reading of the included drawing figures, the claims and detailed description of the invention.

BRIEF DESCRIPTION OF THE DRAWINGS

FIG. **1** is a perspective view of a T-bar according to a preferred embodiment of this invention configured to include lighting mounted to a lower portion thereof and with heat dissipating structures above the light source.

FIG. **2** is a detail of that which is shown in FIG. **1** and with central portions of the T-bar cut away.

FIG. **3** is a full sectional view of the T-bar of FIGS. **1** and **2**.

FIG. **4** is a full sectional view similar to that which is shown in FIG. **3** but with included ceiling panels resting upon the T-bar and a lighting module located within a light housing of the T-bar.

FIG. **5** is a perspective view of a dropped ceiling system including the T-bar of this invention and with a portion of a ceiling tile cut away to reveal portions of the T-bar above the dropped ceiling, as well as a power supply coupled to the T-bar and for supplying electric power to the lighting according to this invention.

FIG. **6** is a perspective view of the power supply for supplying power to the light module of this invention, shown attached to the T-bar of FIG. **1**, with the T-bar shown in broken lines.

FIG. **7** is a sectional view of that which is shown in FIG. **6** and with the power supply exploded away from the T-bar and shown in phantom coupled to the T-bar to illustrate how the power supply is removably attachable to the T-bar.

FIG. **8** is a perspective view of a T-bar with included lighting module according to an alternative embodiment featuring low intensity light emitting diode (LED) lighting technology.

FIG. **9** is a perspective view of the T-bar of one form of this invention with included lighting module in the form of three high intensity light emitting diodes (LEDs), for example.

DESCRIPTION OF THE PREFERRED EMBODIMENT

Referring to the drawings, wherein like reference numerals represent like parts throughout the various drawing figures, reference numeral **10** is directed to a T-bar (FIG. **1**) forming a portion of a dropped ceiling system (FIG. **5**) with the T-bar including a lighting module **70** (FIGS. **4**, **5**, **8** and **9**) coupled to a lower end of the T-bar **10** for providing lighting in a space below the dropped ceiling system. The T-bar **10** includes heat dissipating structures including an upper heat sink **40** and lower heat sink **60** in this preferred embodiment for dissipating heat from the lighting module **70** or other heat sources adjacent the T-bar **10**.

In essence, and with particular reference to FIGS. **1-3**, basic details of the T-bar **10** and associated features of this invention are described, according to this most preferred embodiment. The T-bar **10** is an elongate rigid structure extending between terminal ends and preferably having a substantially constant contour between the two terminal ends of the T-bar **10**. A fixed anchor **20** is located at one of the terminal ends of the T-bar **10**. An adjustable anchor **30** is provided at the opposite terminal end of the T-bar **10**. The adjustable anchor **30** can be adjusted in length slightly (arrow A of FIGS. **1** and **2**). The anchors allow the T-bar **10** to be connected to adjacent T-bars or other suspension structures, with the adjustable anchor **30** facilitating the process of attaching and detaching the T-bar **10** to adjacent structures, typically standard conventional prior art T-bars within a conventional dropped ceiling system.

The T-bar **10** includes an upper heat sink **40** on an upper portion of the T-bar **10**. This upper heat sink **40** is adapted to efficiently transfer heat away from the T-bar **10** to air surrounding upper portions of the T-bar **10**. A lower portion of the T-bar **10** preferably supports a light housing **50**. This light housing **50** is configured to be located below a dropped ceiling of which the T-bar **10** is a part, with the light housing **50** adapted to hold a lighting module **70** therein, such as a light emitting diode (LED) lighting module **70**. Preferably, a lower heat sink **60** is also provided on the T-bar **10**. This lower heat sink **60** is preferably built into a rest shelf **62** of the T-bar **10** which also functions to hold edges of ceiling tiles C (FIGS. **4** and **5**) adjacent the T-bar **10**. A power supply **80** is provided (FIGS. **6** and **7**) which can be attached to the T-bar **10**, such as by removable attachment in a manner gripping the upper heat sink **40**. The T-bar **10** thus supports the ceiling tiles C and also is configured to include lighting therein and adapted to transfer heat away from lighting or other structures adjacent lower portions of the T-bar **10** and to also support a power supply **80** for the lighting.

More specifically, and with continuing reference to FIGS. **1-3**, particular details of the structure of the T-bar **10** itself are described, according to this most preferred embodiment. The T-bar **10** is preferably a rigid elongate structure formed of aluminum. Most preferably, the T-bar **10** is extruded so that it

has a constant cross-sectional form (FIG. **3**) including the various features provided by the preferred embodiment of this invention.

The T-bar **10** could be formed of other materials, with emphasis placed on the ability of the material to facilitate conduction heat transfer therethrough, and also have desirable weight and strength characteristics to operate as a portion of a dropped ceiling system. Other materials which might be suitable in some circumstances include steel. It is also conceivable that the T-bar **10** could be formed of separate components attached together, with the separate components either being made of a common material or from different materials. If the different portions of the T-bar **10** are formed of different materials and different subassemblies, these subassemblies are preferably fixedly held adjacent each other such that the T-bar **10** functions primarily as a single unit.

The cross-section of the T-bar **10** generally includes a spine **12** which is preferably a somewhat thin planar structure which extends substantially vertically up from a rest shelf **62**. The spine **12** and rest shelf **62** together form an inverted "T" to generally form the T-bar **10**. The spine **12** preferably includes a slot **14** near a midpoint thereof, and potentially at other portions passing through the spine **12**. The slot **14** is configured to receive tabs **22** of adjacent T-bars **10** that might be suspended from the slot **14** in the T-bar **10** to complete the dropped ceiling. Suspension holes **16** also preferably pass through the spines **12**. These suspension holes **16** can accommodate wires or other suspension lines which extend up to anchor points above the dropped ceiling so that the suspension holes **16** act to support the entire dropped ceiling in a desired position (FIG. **5**). Additional suspension holes **16** can be provided if required.

The T-bar **10** in this embodiment is approximately two feet long. In other embodiments, the T-bar **10** could be longer (or shorter) but preferably has a contour similar to that disclosed in FIGS. **1-3** regardless of the length of the T-bar **10**. Another standard size for the T-bar **10** would typically be four feet. Conceivably in particularly long lengths, the T-bar **10** might be slightly changed in geometry to have the structural strength required to remain rigid over such long spans. Other modifications to the T-bar **10** can be made consistent with known techniques for T-bar modification within the dropped ceiling T-bar art.

With particular reference to FIG. **2**, details of the fixed anchor **20** and adjustable anchor **30** for the terminal ends of the T-bar **10** are described, according to this preferred embodiment. While the T-bar **10** could conceivably include two fixed anchors **20** or two adjustable anchors **30**, preferably the T-bar **10** includes one fixed anchor **20** and one adjustable anchor **30**. The fixed anchor **20** includes a tab **22** defining a thin axial extension from the spine **12** sized to fit within the slot **14** of another T-bar. A lower portion of this tab **22** is preferably configured with a lower notch **24**. A tooth **26** preferably is provided beyond the lower notch **24** and defines a portion of the tab **22** lower than other portions of the tab **22**. Taken together, the tab **22** with the lower notch **24** and tooth **26** allow the fixed anchor **20** to pass through a slot **14** or other related support structure with the tooth **26** hanging down beyond the slot **14** and with the lower notch **24** straddling the slot **14**, so that the tab **22** is generally held within the slot **14**. To remove the fixed anchor **20** from within the slot **14**, a user would lift slightly on the T-bar **10** and then translate the tab **22** of the fixed anchor **20** out of the slot **14** by translating the entire T-bar **10**.

When the end of the T-bar **10** opposite the fixed anchor **20** is positioned so that it cannot be readily moved, it is desirable to utilize an adjustable anchor **30** on at least one end of the T-bar **10**. With the adjustable anchor **30**, the tab **22** can be removed from one of the terminal ends of the T-bar **10** even when each end of the T-bar **10** is positioned where it cannot be translated linearly axial to an elongate axis of the T-bar **10** due to constraints adjacent ends of the T-bar **10**.

In particular, and in this exemplary embodiment, the adjustable anchor **30** preferably has a form similar to the fixed anchor **20**, except that the tab **22** is capable of translating horizontally and axially along a long axis of the T-bar **10** (along arrow A of FIGS. **1** and **2**). The adjustable anchor **30** is preferably mounted on a plate **32**. This plate **32** includes a slot **34** therein and resides within a recess **36** at an end of the spine **12**, adjacent the terminal end having the adjustable anchor **30** thereon. The recess **36** defines a portion of the spine **12** of only partial thickness within which the plate **32** resides. A threaded shaft **35** passes through the slot **34** and is fixed to the spine **12**. This slot **34** can slide relative to the threaded shaft **35** so that the adjustable anchor **30** is allowed to translate linearly in a horizontal direction, but is restrained from other motion.

A wing nut **37** or other fastener is preferably provided which can attach to the threaded shaft **35** and affix the adjustable anchor **30** in any given position relative to the slot **34**. Thus, for instance, when the T-bar **10** is to be removed from an adjacent T-bar, the wing nut **37** of the adjustable anchor **30** is loosened. Next, the adjustable anchor **30** is allowed to translate with the slot **34** sliding over the threaded shaft **35** until the tab **22** associated with the adjustable anchor **30** has been moved out of the slot **14** in which it is anchored. The entire T-bar **10** can then be translated in a downward direction. The T-bar **10** can then be replaced with a replacement T-bar of any variety. The adjustable anchor **30** can be modified to connect within other existing ceiling systems. In such other ceiling systems the fixed anchor **20** could also be modified to attach within such systems.

With particular reference to FIGS. **2-4**, particular details of the upper heat sink **40** of the T-bar **10** are described, according to this most preferred embodiment. The T-bar **10** is preferably configured with the upper heat sink **40** formed and positioned to efficiently transfer heat from the T-bar **10** to air space adjacent upper portions of the T-bar **10**. To facilitate such heat transfer, the upper heat sink **40** is provided. By enhancing a surface area of the T-bar **10** adjacent the upper heat sink **40**, natural convection is accelerated so that heat is drawn away from the T-bar **10** more rapidly.

Conduction heat transfer between a lighting module **70** adjacent a lower end of the T-bar **10** can thus more effectively occur through the T-bar **10**, to the upper heat sink **40**. Convection heat transfer then effectively moves the heat from the heat sink **40** out to air surrounding the upper heat sink **40**, to minimize temperature increase of the lighting module **70** and enhance its operating longevity. Also, with LED lighting, such temperature reduction causes the lighting module **70** to most efficiently convert electric power to light, enhancing the efficiency with which the lighting module **70** operates.

The upper heat sink **40** includes at least one fin, but most preferably includes a series of fins extending laterally from each side of an upper end of the spine **12**. In the embodiment shown, six fins **44** extend laterally from each side of the spine **12**, between an upper end **42** and a lower end **48**. Lateral gaps **46** are provided between the adjacent lateral fins **44**. Air within the lateral gaps **46** is heated and then passes out of the lateral gaps **46** by natural convection, being replaced by cooler air which is then heated and travels out by natural convection, with this process continuing so that natural convection heat transfer accelerates removal of heat from the T-bar **10** through the upper heat sink **40**.

The upper heat sink **40** also acts as a portion of the T-bar **10** which conveniently facilitates attachment of the power supply **80** associated with the lighting module **70** to be mounted to the T-bar **10** in a convenient and reliable manner, as described in detail below.

With continuing reference to FIGS. **2-4**, details of the light housing **50** of this invention are described according to this most preferred embodiment. The light housing **50** defines a portion of the T-bar **10** which is particularly configured to contain a lighting module **70** therein, such as a light emitting diode (LED) lighting module **70**. The light housing **50** could have a variety of different configurations with the configurations shown here merely being one such effective configuration.

The light housing **50** is preferably rigid in form and shaped along with the other portions of the T-bar **10** as a single unitary mass of material. This light housing **50** includes a top wall **52** which is preferably planar and extends substantially horizontally and acts as an underside of the rest shelf **62** upon which ceiling tiles C are positioned. Side walls **54** extend down from front and back edges of the top wall **52**. These side walls **54** are preferably parallel with each other and substantially mirror images of each other. Tips **56** of the side walls **54** define lowermost portions of this light housing **50**, with a light supporting space therebetween.

Track slots **58** are preferably provided in the side walls **54** adjacent the tips **56**. These track slots **58** can help to hold and direct into the light housing **50** a lighting module **70**, such as that described and shown in FIG. **4**, including a light element **76** that is preferably in the form of a light emitting diode (LED).

The lighting module **70** can be any of a variety of different kinds of lighting modules, but is most preferably an LED lighting module such as the low intensity lighting module **70'** associated with the T-bar **10'** (FIG. **8**) or the high intensity lighting module **70** associated with the T-bar **10** shown in FIG. **9**. In the embodiment of FIG. **8**, thirty separate LEDs make up the low intensity lighting module **70**. In the embodiment of FIG. **9**, three high intensity LEDs provide the lighting module **70** and would typically provide a similar amount of light (if not more) than that supplied by the low intensity lighting module of FIG. **8**. High intensity LEDs require an even greater amount of heat dissipation than low intensity LEDs for optimal life.

With further reference to FIG. **4**, the particular details of the lighting module **70** preferably include an enclosure **72** which fits within the light housing **50** and includes side rails **74** which rest within the track slots **58** of the light housing **50** to support the lighting module **70** within the light housing **50**. A light element **76** is included within the lighting module **70** as well as required electronics. A reflector **78** is preferably provided to optimally reflect most of the light down to the space below the lighting module **70**.

Preferably, portions of the lighting module **70** including the enclosure **72** are formed of aluminum or other relatively high rate of heat transfer materials to optimize heat transfer from the light element **76** and associated electronics to the adjacent light housing **50** and other portions of the T-bar **10**. The top wall **52** of the light housing **50** is configured to be directly adjacent upper portions of the enclosure **72** of the lighting module **70**. In this way, conduction heat transfer can efficiently occur between the lighting module **70** and the light housing **50** of the T-bar **10**.

Most preferably, the T-bar **10** includes a lower heat sink **60** in addition to the upper heat sink **40**, but could optionally have only the upper heat sink **40** or only the lower heat sink **60**. Additionally, further heat sinks could be attached to or formed with the T-bar **10**, such as extending laterally from the spine **12** below the upper heat sink **40**. The lower heat sink **60** includes a plurality of fins extending up from the rest shelf **62**. These fins preferably include an outer fin **64** most distant from the spine **12** and short fins **66** between the outer fins **64** and the spine **12**. Vertical gaps **68** are provided between the fins **64**, **66**.

While these fins **64**, **66** generally act to enhance convection heat transfer, these fins **64**, **66** also are preferably configured so that air between the fins **64**, **66**, and within the gaps **68** is not trapped, but rather can travel out (along arrow H of FIG. **4**) of these gaps. By providing the outer fins **64** as tall fins, taller than the short fins **66**, such a gap is provided for passage of air (along arrow H of FIG. **4**) with the ceiling tile C resting upon the outer fin **64** and above the short fins **66**. If required, portions of the ceiling tile C adjacent the rest shelf **62** could be adjusted geometrically and/or formed of alternate materials to ensure that this gap for heat transfer along arrow H is maintained.

With particular reference to FIGS. **5-7**, details of the power supply **80** for conditioning and delivering power to the lighting module **70** and mounting the power supply **80** to the T-bar **10** are described, according to a most preferred embodiment. The light element **76** within the lighting module **70** typically requires electric power having a particular voltage, current and potentially cycle rate (for AC power) and perhaps other characteristics for optimal performance. The power supply **80** is preferably provided to transform available power into power having a form most optimal for powering the light source **76** within the lighting module **70**. In the case of LED lighting, typically low voltage DC power is required. Often available power for the lighting is in the form of between 110 volt and 277 volt AC power. The power supply **80** in such a configuration would be primarily in the form of an AC to DC transformer with an output voltage matching that required for the LED lighting involved.

The power supply **80** is preferably generally provided as a module **84** in an enclosure that is mounted upon a plate **82** which is preferably substantially planar and configured to be aligned substantially coplanar with the spine **12**. In this way, the power supply **80** and associated mounting hardware generally remain in an area directly above the T-bar **10** so that ceiling tiles C resting upon the T-bar **10** can still be readily moved off of the T-bar **10** to replace ceiling tiles C and to access space above the dropped ceiling.

A separate bracket **86** is preferably provided which is removably and adjustably attachable, such as through a fastener **88** to the plate **82**. In one embodiment, this fastener **88** is in the form of a wing nut acting on a threaded shaft mounted to the plate **82**. A channel **83** is preferably formed of a plate **82** and a channel **87** is preferably formed on the bracket **86**. These channels **83**, **87** are preferably complemental in form and facing each other. These channels **83**, **87** preferably have a height similar of a height between the upper end **42** and lower end **48** of the upper heat sink **40**. Thus, when the fastener **88** tightens the bracket **86** toward the plate **82**, the channels **83**, **87** can grip the upper heat sink **40** and hold the entire plate **82** and associated module **84** of the power supply **80** rigidly to the T-bar **10**.

Wiring (FIG. **5**) extends from a source of power down to the module **84** of the power supply **80**. Additional wiring (not shown) would be routed from the module **84** down to the lighting module **70**, such as through holes in the top wall **52** of the light housing **50**, to provide power to the lighting module **70**. It is conceivable that a single power supply **80** could be provided for each lighting module **70** of each T-bar **10**, or a

single power supply **80** could serve more than one lighting module **70** of multiple separate T-bars **10**.

While the T-bar **10** of this preferred embodiment has been described in an embodiment where a lighting module is held within a light housing **50** of the T-bar **10**, the T-bar **10** could support other structures which require heat dissipation, other than lighting, or lighting other than LED lighting. For instance, a fluorescent light bulb could be supported within the light housing **50** according to this invention. Other heat generating accessories desired to be mounted within the ceiling could also be mounted to the T-bar **10**, for instance loud speakers could be fitted to lower portions of the T-bar **10** with heat dissipation provided by the various heat sinks **40**, **60** of the T-bar **10** according to various different embodiments of this invention.

This disclosure is provided to reveal a preferred embodiment of the invention and a best mode for practicing the invention. Having thus described the invention in this way, it should be apparent that various different modifications can be made to the preferred embodiment without departing from the scope and spirit of this invention disclosure. When structures are identified as a means to perform a function, the identification is intended to include all structures which can perform the function specified. When structures of this invention are identified as being coupled together, such language should be interpreted broadly to include the structures being coupled directly together (or formed together) or coupled together through intervening structures. Such coupling could be permanent or temporary and either in a rigid fashion or in a fashion which allows pivoting, sliding or other relative motion while still providing some form of attachment, unless specifically restricted.

What is claimed is:

1. A T-bar for a suspended ceiling, comprising in combination:

an elongate rigid spine extending between terminal ends including a first terminal end and a second terminal end;

said spine formed at least partially of a material having a higher than average thermal conductivity;

said terminal ends each adapted to be coupled to adjacent supports;

a lower portion of said spine including a rest shelf extending to at least one lateral side of said spine, said rest shelf adapted to support an edge of a ceiling tile resting upon said rest shelf, wherein said rest shelf includes at least one fin on a top thereof;

at least one light source carried by said spine beneath said rest shelf; and

at least one fin coupled to a portion of said spine above said rest shelf, said fin in heat transfer connection with said spine and said light source, said fin enhancing a surface area available for heat transfer to air adjacent said spine.

2. The T-bar of claim **1** wherein said at least one fin forms a portion of an upper heat sink coupled to said spine, said upper heat sink including a plurality of fins and a plurality of gaps between said fins.

3. The T-bar of claim **2** wherein said upper heat sink is located at an upper end of said spine opposite said rest shelf.

4. The T-bar of claim **3** wherein said rest shelf includes a plurality of fins extending non-horizontally away from said rest shelf, said fins extending from said rest shelf that are most distant from said spine being in the form of tall fins extending further vertically above said rest shelf than other of said fins extending from said rest shelf, such that a pathway for hot air to escape is provided between said rest shelf and portions of an adjacent horizontally extending ceiling tile overlying said rest shelf and resting upon said tall fin.

5. The T-bar of claim **4** wherein said light source includes a light emitting diode, said light emitting diode in heat transfer contact with said rest shelf and said spine.

6. The T-bar of claim **5** wherein a light source housing extends down from said rest shelf to a pair of lower edges, said housing having a light supporting space between said edges.

7. The T-bar of claim **6** wherein said housing, said upper heat sink and said plurality of fins on said rest shelf are each formed from a unitary mass of material having higher than average thermal conductivity.

8. The T-bar of claim **3** wherein a power supply is provided adapted to deliver electric power to said light source, said power supply adapted to be attached to said upper heat sink.

9. The T-bar of claim **8** wherein said power supply is mounted upon a plate, and wherein a bracket is supplied adjacent said plate and adjustably attachable relative to said plate with a channel between said bracket and said plate, said channel having a contour matching a contour of said upper heat sink, such that when said bracket is tightened toward said plate, said upper heat sink is gripped between said bracket and said plate within said channel, to cause said power supply to be supported by said upper heat sink.

10. The T-bar of claim **1** wherein said terminal ends each include tabs attachable to slots in spines of adjacent T-bars within a dropped ceiling system.

11. The T-bar of claim **10** wherein at least one of said terminal ends includes an adjustable anchor, said adjustable anchor including a sliding plate having a tab at a tip thereof, said sliding plate adjustably attachable to said spine to adjust a distance between said terminal ends of said T-bar.

12. A heat dissipating T-bar with included light source, comprising in combination:

an elongate T-bar adapted to support ceiling tiles within a suspended ceiling system;

said elongate T-bar formed of a material having a higher than average thermal conductivity;

an upper portion of said T-bar including a heat sink having at least one fin;

a lower portion of said T-bar including a light source adapted to shine light downwardly from said lower portion of said T-bar, wherein said lower portion of said T-bar includes a rest shelf upon which edges of ceiling tiles are supported, said rest shelf including a plurality of fins extending therefrom at least partially upward from said rest shelf, an outer one of said plurality of fins extending at least partially upward from said rest shelf to an extent higher than other fins extending from said rest shelf; and

said heat sink in heat transfer connection with said light source through said T-bar.

13. The T-bar of claim **12** wherein said heat sink includes a plurality of fins spaced apart by gaps therebetween.

14. The T-bar of claim **13** wherein said fins of said heat sink extend in opposite directions from a central spine forming at least a portion of said elongate T-bar.

15. The T-bar of claim **14** wherein said fins of said heat sink extend substantially horizontally from said spine of said T-bar.

16. The T-bar of claim **13** wherein a light source power supply includes a support bracket and a plate adjustably attachable to each other with a channel formed between said bracket and said plate, said channel of complemental form with said heat sink, such that said light source power supply can be coupled to said T-bar through said heat sink.

17. The T-bar of claim **12** wherein said T-bar includes a pair of terminal ends each including tabs attachable to slots in spines of adjacent T-bars; and

wherein at least one of said terminal ends includes an adjustable anchor, said adjustable anchor including a sliding plate having a tab at a tip thereof, said sliding plate adjustably attachable to said T-bar to adjust a distance between said terminal ends of said T-bar.

18. A method for enhancing the operating life of a dropped ceiling T-bar mounted light emitting diode lighting system, including the steps of:

providing at least one light emitting diode light suspended from a lower portion of a T-bar;

configuring the T-bar to include a rest shelf adapted to support at least one ceiling tile thereon, and configuring the rest shelf to include a plurality of heat sink fins extending at least partially upward therefrom;

configuring the T-bar to include a spine extending up from the rest shelf;

forming the T-bar at least partially of a material having a higher than average thermal conductivity;

providing a heat sink on the T-bar; and

connecting the heat sink in heat transfer relationship with the spine and the light emitting diode light such that heat generated by the light is conducted to the heat sink to reduce a temperature of the light and correspondingly enhance the operating life of the light.

19. The method of claim **18** including the further step of configuring the spine to include heat sink fins extending at least partially horizontally therefrom.

20. The method of claim **19** including the further step of providing a light source power supply which includes a support bracket and a plate adjustably attachable to each other with a channel formed between the bracket and the plate, the channel of complemental form with the heat sink on the T-bar, such that the light source power supply can be coupled to the T-bar through the bracket, plate and heat sink.

21. The method of claim **18** including the further step of configuring ends of the T-bar to include tabs attachable to slots in spines of adjacent T-bars.

* * * * *