US00D565144S

(12) United States Design Patent
Price

(10) **Patent No.: US D565,144 S**
(45) **Date of Patent: ** Mar. 25, 2008**

(54) **SIGHT FOR USE ON FIREARMS**

(76) Inventor: **Donald H. Price**, 1574 Coburg Rd., Suite 194, Eugene, OR (US) 97401

(**) Term: **14 Years**

(21) Appl. No.: **29/232,652**

(22) Filed: **Jun. 21, 2005**

(51) **LOC (8) Cl.** **22-01**
(52) **U.S. Cl.** **D22/109**
(58) **Field of Classification Search** D22/100, D22/108, 109, 110, 199; 42/111–113, 120, 42/124, 132, 136, 134, 137, 138, 145, 144, 42/148; 89/41.19, 161, 200–204; 33/227
See application file for complete search history.

(56) **References Cited**

U.S. PATENT DOCUMENTS

882,182	A	3/1908	Thompson
1,171,310	A	2/1916	Bisbee
1,268,537	A	6/1918	Bader
1,363,553	A	12/1920	Moreau
1,755,635	A	4/1930	Dindinger
2,706,335	A	4/1955	Munsey
D296,227	S	6/1988	Novak
D351,449	S	10/1994	Dagley
D361,366	S	8/1995	Emerson
D363,334	S	10/1995	De Oliveira Masina
D382,038	S	8/1997	Nigh
5,822,872	A	10/1998	Waki
D403,734	S	1/1999	Kay
6,058,616	A	5/2000	Bubits
D428,102	S	7/2000	Flubacher et al.
D432,618	S	10/2000	Wilson
D435,080	S	12/2000	Ling, Jr.
D435,282	S	12/2000	Ling, Jr.
D436,393	S	1/2001	Ling, Jr.

(Continued)

OTHER PUBLICATIONS

North Pass, Ltd.; HiViz Shooting Systems Catalog; TriViz Sight; 2005; p. 5; U.S.A.

North Pass, Ltd.; HiViz Shooting Systems Brochure; XCel Archery Sight; 2005; U.S.A.

Primary Examiner—Charles A. Rademaker
Assistant Examiner—Melanie Levy
(74) *Attorney, Agent, or Firm*—Heisler & Associates

(57) **CLAIM**

The ornamental design for a sight for use on firearms, as shown and described.

DESCRIPTION

FIG. **1** is a front elevation view of a forward portion of a sight for use on firearms, according to this invention.

FIG. **2** is a perspective view of the forward portion of the invention.

FIG. **3** is a front elevation view of a rearward portion of the invention.

FIG. **4** is a perspective view of the rearward portion of the invention.

FIG. **5** is a front elevation view of the entire invention.

FIG. **6** is a perspective view of the entire invention.

FIG. **7** is a front elevation view of a second embodiment showing the forward portion of the invention.

FIG. **8** is a perspective view of the second embodiment showing the forward portion of the invention.

FIG. **9** is a front elevation view of the second embodiment showing the rearward portion of the invention.

FIG. **10** is a perspective view of the second embodiment showing the rearward portion of the invention.

FIG. **11** is a front elevation view of the second embodiment of the entire invention; and,

FIG. **12** is a perspective view of the second embodiment of the entire invention.

The broken lines in FIGS. **1**–**12** are for purposes of illustration only and form no part of the claimed design.

1 Claim, 2 Drawing Sheets

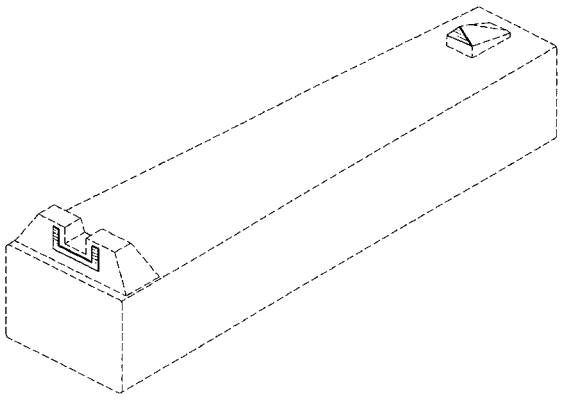

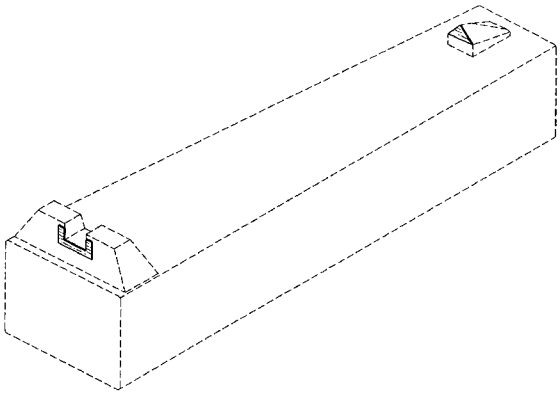

U.S. PATENT DOCUMENTS

D443,016	S	5/2001	Nigh	
6,233,836	B1	5/2001	Uhlmann et al.	
6,360,471	B1	3/2002	Stein	
6,367,189	B1 *	4/2002	Clay	42/145
6,678,987	B2	1/2004	Howe	
D489,115	S *	4/2004	Nasef	D22/109
D492,747	S	7/2004	LoRocco	
6,804,908	B1	10/2004	Hanson	
D515,170	S *	2/2006	Price	D22/109
D546,915	S *	7/2007	Price	D22/109
2003/0074824	A1 *	4/2003	Arachequesne	42/111

* cited by examiner

Fig. 1

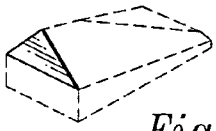

Fig. 2

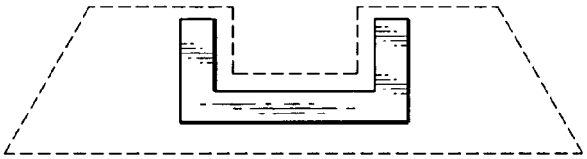

Fig. 3

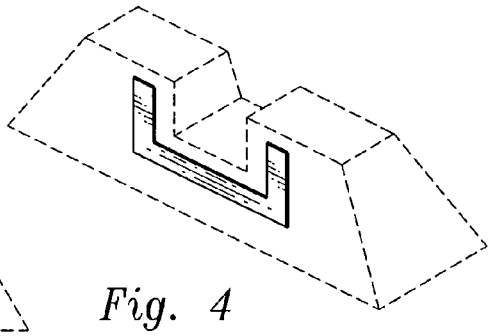

Fig. 4

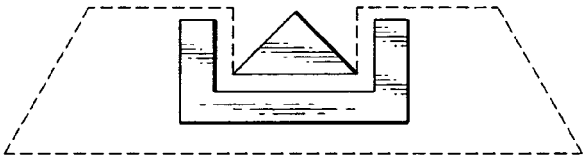

Fig. 5

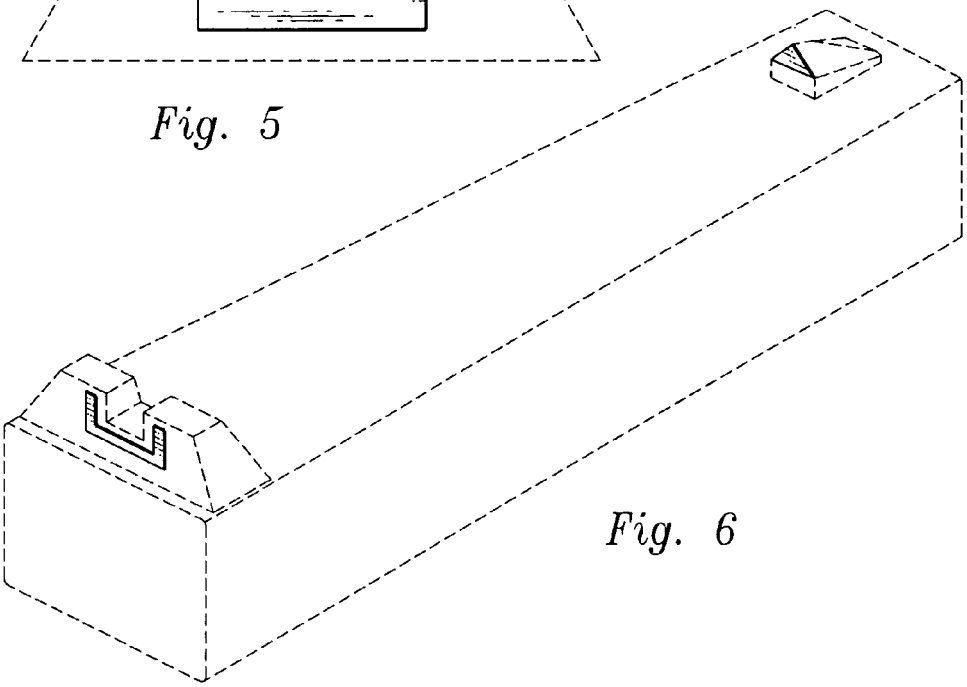

Fig. 6

Fig. 7

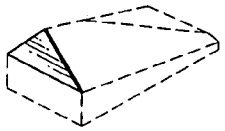

Fig. 8

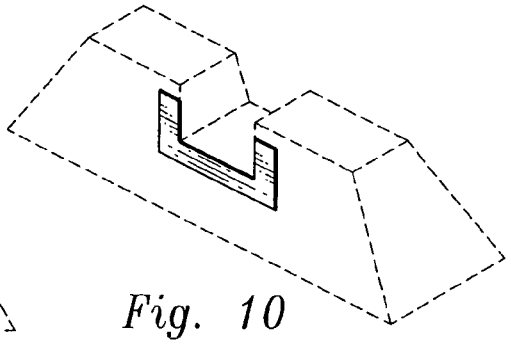

Fig. 10

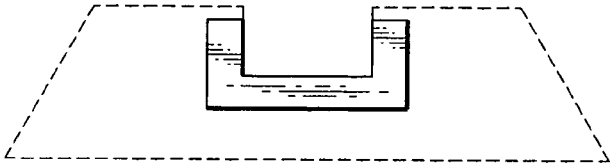

Fig. 9

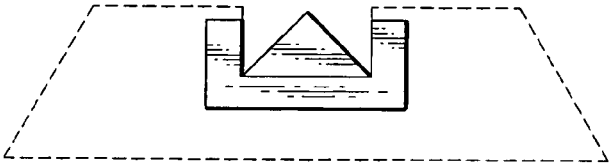

Fig. 11

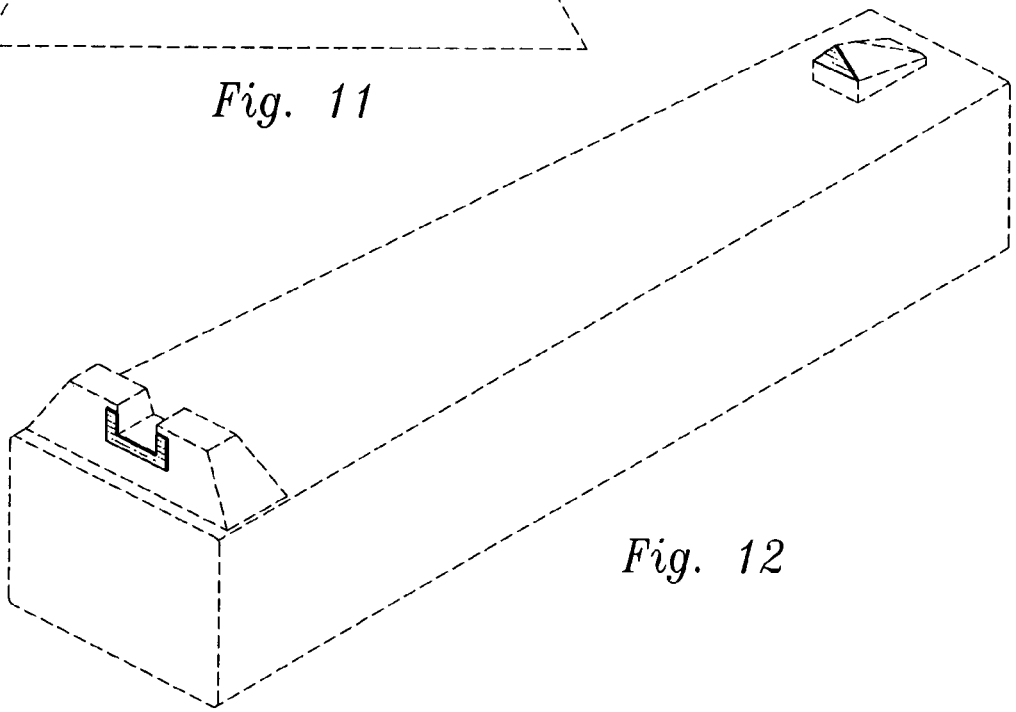

Fig. 12